SEL-2890

EIA-232 to Ethernet, 10BASE-T Transceiver, 300 to 115,000 Bits per Second

Part Number:

2	8	9	0	M		X

EIA-232 Connector

Male DB-9					M		

Packaging[1]

SEL-2890 Transceiver Only						0	
SEL-2890 Transceiver with C642 Configuration Cable*						1	

* Additional Cost
[1] One configuration cable required.

Note: When one or more SEL-2890 transceivers are ordered, the order comes standard with one (1) CD instruction manual and one (1) printed instruction manual.

The following accessories are available for use with the SEL-2890:
- C642 - 4 foot configuration cable including 100–240 Vac 47–63 Hz power supply (see Diagram 1)
- PM2890-01 - Additional instruction manual

CAT5E, Shielded Twisted Pair (STP) Cable - used to connect the 2890 to an ethernet hub or switch (as shown in Diagram 2):
- C627

Diagram 1: Configuration Connection

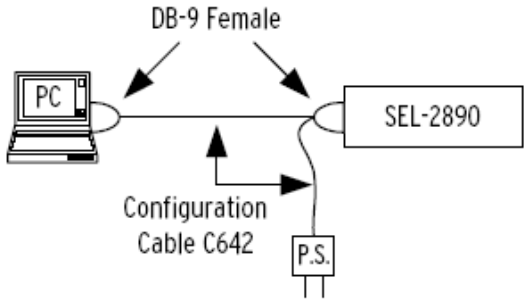

Diagram 2: Operation Connection

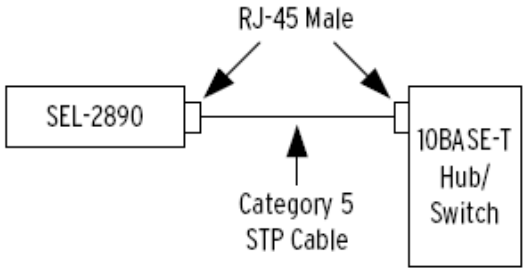

Notes:
- The configuration cable provides power to the SEL-2890 and is required to set the IP address of the unit.
- Compatible with all 200, 300, 400, and 500 series relays and 20X0 Communications Processors.
- Category 5 STP Cable required for fast transient immunity compliance.

Making Electric Power Safer, More Reliable, and More Economical ®

An Employee Owned Company

SEL SCHWEITZER ENGINEERING LABORATORIES, INC.
2350 NE Hopkins Court - Pullman, WA 99163
Phone: (509) 332-1890 - Fax: (509) 332-7990

Copyright © SEL 2001–2007
All rights reserved.

WI-2761
20070501