REVIEW OF GROUND FAULT PROTECTION METHODS FOR GROUNDED, UNGROUNDED, AND COMPENSATED DISTRIBUTION SYSTEMS

Jeff Roberts, Dr. Hector J. Altuve, and Dr. Daqing Hou
Schweitzer Engineering Laboratories, Inc.
Pullman, WA USA

ABSTRACT

This paper reviews ground fault protection and detection methods for distribution systems. First, we review and compare medium-voltage distribution-system grounding methods. Next, we describe directional elements suitable to provide ground fault protection in solidly- and low-impedance grounded distribution systems. We then analyze the behavior of ungrounded systems under ground fault conditions and introduce a new ground directional element for these systems. Then we examine the behavior of compensated systems during ground faults and describe traditional fault detection methods. We conclude by introducing new ground fault detection methods for compensated systems.

INTRODUCTION

Ground fault current magnitudes depend on the system grounding method. Solidly- and low-impedance grounded systems may have high levels of ground fault currents. These high levels typically require line tripping to remove the fault from the system. Ground overcurrent and directional overcurrent relays are the typical ground fault protection solution for such systems. However, high-impedance ground fault detection is difficult in multigrounded four-wire systems, in which the relay measures the ground fault current combined with the unbalance current generated by line phasing and configuration and load unbalance.

Ungrounded systems have no intentional ground. For a single-line-to-ground fault on these systems, the only path for ground current to flow is through the distributed line-to-ground capacitance of the surrounding system and of the two remaining unfaulted phases of the faulted circuit.

In resonant-grounded or compensated distribution networks the system is grounded through a variable impedance reactor connected to the power transformer secondary neutral or the neutral of a grounding bank. This reactor compensates the system phase-to-ground capacitance such that the zero-sequence network becomes a very high impedance path. The reactor, known as the Petersen coil, permits adjustment of the inductance value to preserve the tuning condition of the system for different network topologies.

Resonant grounding provides self-extinction of the fault arc in overhead lines for about 80 percent of temporary ground faults [1]. Considering that about 80 percent of ground faults are temporary, we conclude that more than 60 percent of overhead line ground faults clear without breaker tripping. High-impedance grounded systems are grounded through a high-impedance resistor or reactor with an impedance equal to or slightly less than the total system capacitive reactance to ground. The neutral resistor is of such a high value that ground faults on such systems have very similar characteristics to those of resonant-grounded systems.

Because ground faults in ungrounded, high-impedance grounded, and compensated systems do not affect the phase-to-phase voltage triangle, it is possible to continue operating either system in the faulted condition. However, the system must have a phase-to-phase insulation level and all loads must be connected phase-to-phase.

Ground relays for these systems require high relay sensitivity because the fault current is very low compared to solidly grounded systems. Most ground-fault detection methods use fundamental-frequency voltage and current components. The varmetric method [2] is the traditional ground fault detection solution in ungrounded systems. We may also use this method in high-impedance grounded systems. The wattmetric method [2][3] is a common directional element solution for compensated systems, but its sensitivity is limited to fault resistances no higher than a few kilohms. We may also use the wattmetric method in high-impedance grounded systems and isolated neutral systems. Other fundamental-frequency methods for compensated systems (such as the admittance method [4][5]), provide increased sensitivity but require information about all feeders, about the possibility of making control actions on the Petersen coil, or both. There are also methods that use the steady-state harmonic content of current and voltage to detect ground faults [6][7]. Another group of methods detects the fault-generated transient components of voltage and current [6][8]. These methods have limited sensitivity, because high-resistance faults reduce the level of the steady-state harmonics and damp the transient components of voltage and current.

GROUNDING METHODS OF MEDIUM-VOLTAGE DISTRIBUTION NETWORKS

The main goals of system grounding are to minimize voltage and thermal stresses on equipment, provide personnel safety, reduce communications system interference, and give assistance in rapid detection and elimination of ground faults.

With the exception of voltage stress, operating a system as ungrounded, high-impedance grounded, or resonant grounded restricts ground fault current magnitudes and achieves most of the goals listed above. The drawback of these grounding methods is that they also create fault detection (protection) sensitivity problems. We can create a system grounding that reduces voltage stress at the cost of large fault current magnitudes. However, in such a system the faulted circuit must be de-energized immediately to avoid thermal stress, communications channel interference, and human safety hazards. The disadvantage of this system is that service must be interrupted even for temporary faults.

The following is a brief description of the grounding methods typically used in medium-voltage distribution circuits. Table 1 summarizes the main characteristics of these grounding methods.

Ungrounded or Isolated Neutral

In an isolated neutral system (see Figure 1), the neutral has no intentional connection to ground: the system is connected to ground through the line-to-ground capacitances. Single line-to-ground faults shift the system-neutral voltage but leave the phase-to-phase voltage triangle intact.

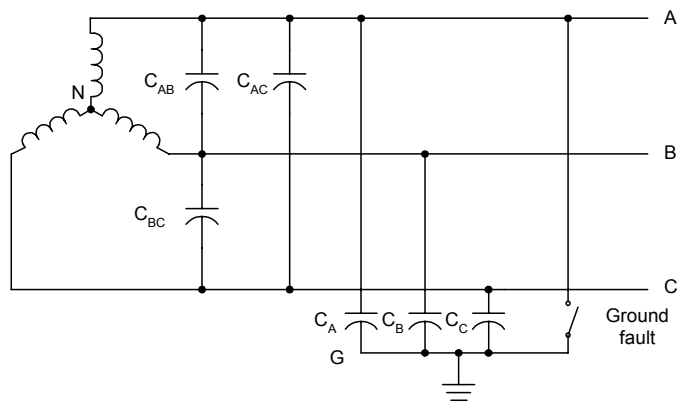

Figure 1 Isolated Neutral System

For these systems, two major ground fault current magnitude-limiting factors are the zero-sequence line-to-ground capacitance and fault resistance. Because the voltage triangle is relatively undisturbed, these systems can remain operational during sustained, low-magnitude faults.

Self-extinction of ground faults in overhead-ungrounded lines is possible for low values of ground fault current. At higher magnitudes of fault current, faults are less likely to self-extinguish at the fault current natural zero-crossing because of the high transient recovery voltage. Later, we discuss how a resonant-grounded system damps this recovery voltage rise, thereby increasing the likelihood of causing the ground fault to self-extinguish.

Zero-sequence [9], or three-phase voltage relays can detect ground faults in ungrounded systems. This method of fault detection is not selective and requires sequential disconnection or isolation of the feeders to determine the faulted feeder. A sensitive, directional ground varmetric element is the typical alternative to sequential disconnection [2]. These elements respond to the quadrature component of the zero-sequence current with respect to the zero-sequence voltage. Later we introduce a new directional element that uses the measured impedance as the measurand for differentiating forward and reverse ground faults.

Effective or Solid Grounding

Effective, or solid, grounding is popular in the United States. To be classified as solidly grounded, the system must have $(X_0 / X_1) \leq 3$ and $(R_0 / X_1) \leq 1$, where X_0 and R_0 are the zero-sequence reactance and resistance, and X_1 is the positive-sequence reactance of the power system [10]. In practice, solidly grounded systems have all power system neutrals connected to earth (or ground) without any intentional impedance between the neutral and earth.

Table 1 Comparison of Grounding Methods for Medium-Voltage Distribution Networks

Issues	Grounding Method					
	Isolated Neutral	**Solid Grounding (Uni-grounding)**	**Solid Grounding (Multi-grounding)**	**Low-Impedance Grounding**	**High-Impedance Grounding**	**Resonant Grounding**
Some Countries of Application	Italy, Japan, Ireland, Russia, Peru, Spain	Great Britain	USA, Canada, Australia, Latin America	France, Spain		Northern and Eastern Europe, China, Israel
Permissible Load Connection	Phase-phase	Phase-phase (3 wires) and phase-neutral (4 wires)	Phase-phase and phase-ground	Phase-phase	Phase-phase	Phase-phase
Required Insulation Level	Phase-phase	Phase-neutral	Phase-neutral	Phase-neutral	Phase-phase	Phase-phase
Limitation of Transient Overvoltages	Bad	Good	Good	Good	Good (R-grounding), Average (L-grounding)	Average
Possible Operation With a Ground Fault	Not always	No	No	No	Not always	Almost always
Self-Extinguishing of Ground Faults	Not always	No	No	No	Not always	Almost always
Human Safety	Average	Good	Bad	Good	Average	Good
Equipment Thermal Stress	Low	High	High	High	Low	Lowest
Interference With Communication Lines	Average	High	High	High	Low	Lowest
Ground Fault Protection Sensitivity	Average	Good	Bad	Good	Average	Average

There are two different practical implementations of solid grounding in medium-voltage distribution systems: unigrounded and multigrounded. In unigrounded systems there may only be three wires with all loads connected phase-to-phase (see Figure 2(a)), or there may be four wires with an isolated neutral and all loads connected phase-to-neutral (see Figure 2(b)). In the latter application the load unbalance current returns through the neutral while the ground fault current returns through the earth to the substation neutral. In multigrounded systems with four wires and phase-to-neutral loads (see Figure 2(c)), the system is grounded at the substation and at every transformer location along the circuit. In some instances some single-phase branch loads are

connected to a line and earth without running a neutral conductor. In these systems both load unbalance and ground fault currents divide between the neutral conductor and earth. Detecting high-resistance ground faults on these systems is difficult because the protective relay measures the high-resistance ground fault current combined with the unbalance current.

Ground faults on these systems may produce high-magnitude currents that require tripping the entire circuit and interrupting load to many customers. About 80 percent of ground faults occurring on overhead distribution lines are transient. For these systems automatic multishot reclosing is widely used. The resulting interruption/restoration cycle can represent a problem to customers with large rotating loads or those with loads intolerant of voltage sags.

Solid grounding reduces the risk of overvoltages during ground faults. These faults do not shift the system neutral (see Figure 2(e)). Thus, the system does not require as high a voltage insulation level as does an isolated neutral system. Transmission systems are typically solidly grounded throughout the world. Distribution systems are commonly unigrounded in Great Britain and multigrounded in North America, Australia, and some Latin American countries.

The typical ground fault protection for solidly grounded systems consists of residually connected (or equivalent mathematical summation) nondirectional and directional overcurrent relays. Detecting high-impedance ground faults is difficult for the nondirectional relay applications on four-wire installations with phase-to-neutral loads because you must set the minimum relay sensitivity greater than the normal load unbalance. Coordination with lateral circuit fuses, primarily sized to carry load, is yet another limiting factor for ground protection sensitivity in these systems [10]. As a result, many downed conductors have remained undetected and energized for a significant time. Recent directional relay developments take into account the normal load and line unbalances and do not require significant degradation of ground relay sensitivity. This latest directional element technology greatly improves sensitivity during low load conditions as compared to nondirectional protection, but it still must limit relay sensitivity during periods of very high load flow.

Low-Impedance Grounding

In this type of grounding the system is grounded through a low-impedance resistor or reactor with the objective of limiting the ground fault current. By limiting the ground fault current magnitudes to tens or hundreds of amperes, you reduce equipment thermal stress, which allows you to purchase less expensive switchgear. This method is equivalent to solid grounding in many other ways, including ground fault protection methods.

Many of the distributed networks in France are low-resistance grounded. In rural distribution networks the ground fault current is limited to 150–300 A primary, and in the urban networks, which have higher capacitive currents, the resistor is selected to limit the ground fault current to a maximum of 1000 A [8]. Industrial plant engineers also use low-impedance grounding in their plant and distribution circuits.

High-Impedance Grounding

In this method the system is grounded through a high-impedance resistor or reactor with an impedance equal to or slightly less than the total system capacitive reactance to ground. The high-impedance grounding method limits ground fault current to 25 A or less. High-resistance grounding limits transient overvoltages to safe values during ground faults. The grounding resistor may be connected in the neutral of a power or grounding transformer, generator or generator-grounding bus, or across a broken delta connection of distribution transformers [10].

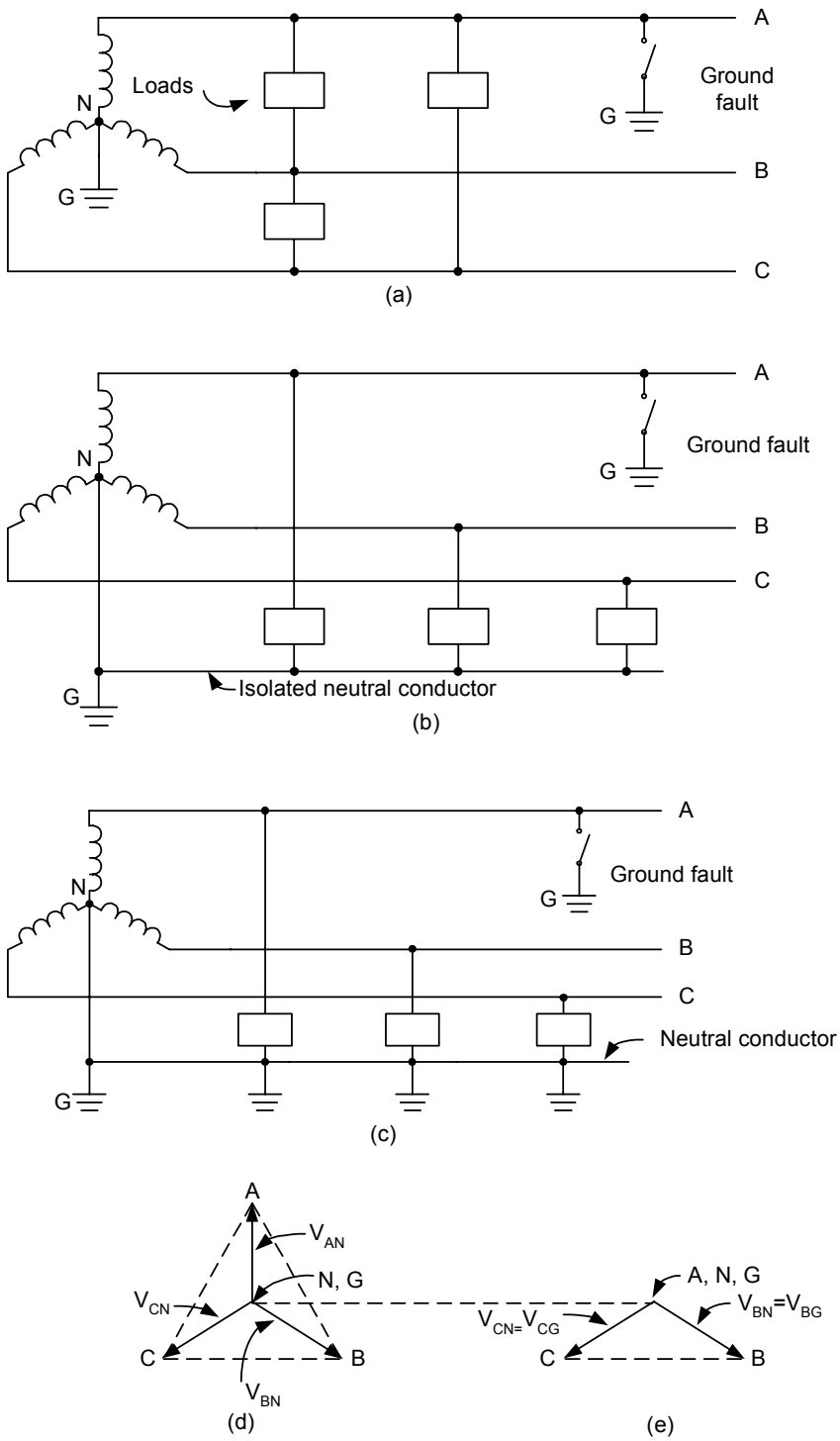

Figure 2 Solidly Grounded Systems: (a) Three-Wire Unigrounded System, (b) Four-Wire Unigrounded System, (c) Four-Wire Multigrounded System, (d) Phasor Diagram for Normal Operation, (e) Phasor Diagram for a Ground Fault

As with isolated neutral systems, ground faults on these systems shift the system neutral voltage without modifying the phase-to-phase voltage triangle. Again, this grounding method permits the utility to continue operating the system during sustained ground faults.

Nonselective ground fault detection is possible by sensing system zero-sequence voltage magnitude and comparing it with an overvoltage threshold, or by measuring all three phase-to-ground voltages and comparing each voltage magnitude against an undervoltage threshold. To find the faulted feeder, you must use sensitive zero-sequence directional elements or disconnect feeders to determine when the zero-sequence voltage drops to a normal level. The traditional directional element is the wattmetric type [2][3], which responds to the in-phase, or active, component of the zero-sequence current with respect to the zero-sequence voltage. For reactance-grounded systems, you can also use a varmetric directional element that responds to the reactive or quadrature component of the zero-sequence current [2].

Typical fields of application for high-resistance grounding include generators connected in a generator-transformer unit [10] and medium-voltage industrial plant distribution networks [11].

Resonant Grounding

In this method of grounding, the system is grounded through a high-impedance reactor, ideally tuned to the overall system phase-to-ground capacitance (see Figure 3). The variable impedance reactor is called a Petersen coil after its inventor, who introduced the concept in 1917. It is also known as an arc-suppression coil or ground-fault neutralizer. The coil is typically connected to the neutral of the distribution transformer or a zigzag grounding transformer. Systems with this type of grounding are often referred to as resonant-grounded or compensated systems. When the system capacitance is matched by the inductance of the coil, the system is fully compensated, or at 100 percent tuning. If the reactor inductance does not match the system capacitance, the system is off tuned. It can be over- or undercompensated, depending on the relationship between inductance and capacitance.

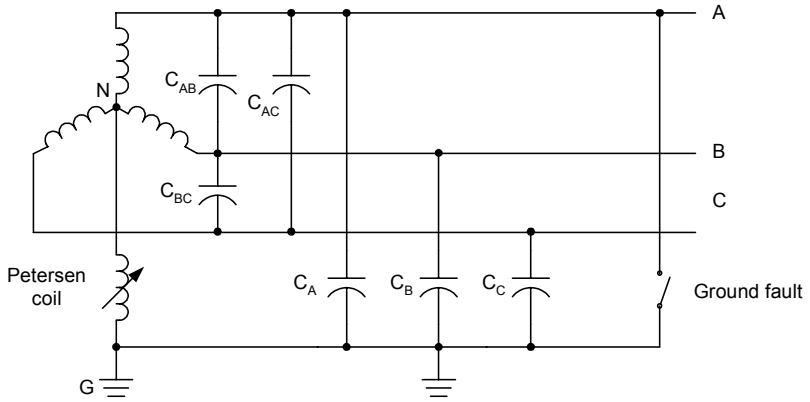

Figure 3 Compensated System

Older installations use a low-cost, fixed value reactor. In these systems the tuning condition, whether under- or overcompensated, changes with the configuration of the distribution network. Tap-changing reactors permit manual or automatic control of the tuning conditions. Modern installations include a moving-core (plunger) reactor equipped with a control system to provide almost 100 percent tuning for all system-operating conditions. These plunger systems also provide a smooth means of system tuning.

Resonant grounding a system can reduce the ground fault current to about 3 to 10 percent of that for an ungrounded system. For 100 percent tuning, the active coil losses, system harmonics, and system active leakage current determine the fault current magnitude [1]. Residual current

compensation methods inject a current through the reactor to the system during the fault, reducing the fault current almost to zero [12].

The arc self-extinction action depends not only on the fault current magnitude, but also on the transient recovery voltage rate after successful arc extinction at the current zero crossing. In compensated systems this voltage recovery time is much slower than in ungrounded systems.

Detecting high-impedance faults in compensated distribution circuits requires a device with a very sensitive residual current input. The wattmetric directional method, described later in this paper, is the most commonly used type of directional element. However, the ground fault resistive coverage of this element is limited by the supervisory zero-sequence overvoltage element setting.

Utilities that trip the lines for permanent faults frequently detect the fault by measuring the zero-sequence voltage and then automatically change the system grounding condition. This switching operation is intended to enhance the sensitivity of the selective ground fault protection. The switching operation has an intentional delay of several seconds to allow the compensated system to extinguish the arc for temporary faults. The thermal rating of the Petersen coil sets this delay time. In some systems, [13] the practice is to by-pass the reactor with a single-pole breaker. Another alternative is to connect a resistor in parallel with the Petersen coil or to an auxiliary winding of the Petersen coil. A problem with these methods is that the connection of the resistor reduces the zero-sequence voltage without necessarily significantly increasing the zero-sequence fault current magnitude. The result is that the action taken to increase fault detection sensitivity can decrease the wattmetric ground directional element sensitivity.

Directional Ground-Fault Elements For Solidly- and Low-Impedance Grounded Systems

Modern distribution systems are becoming looped or multifeed systems because dispersed generation has increased and loops are needed at the distribution level to improve supply reliability to critical loads.

Ground faults in solidly- and low-impedance grounded systems may produce high current levels that require circuit tripping. Use directional elements to provide ground-fault protection in these systems.

Classical ground directional relays (GDRs) respond to either negative- or zero-sequence quantities. For these classical GDRs, we must select which sequence quantities to use for each application and particular system operating conditions. Once you select a GDR model type, with fixed polarizing and operating quantities, the traditional GDRs use these quantities at all times. This restriction may result in directional element misoperation for changing system configurations.

A new GDR, however, selects the best sequence quantities to use for ground faults according to system conditions. It is possible for this new GDR to use a negative-sequence directional element for one fault and a zero-sequence voltage-polarized directional element for the next ground fault.

This new ground directional relay consists of a combination of three directional elements: Zero-Sequence Current-Polarized (32I), Negative-Sequence Voltage-Polarized (32Q), and Zero-Sequence Voltage-Polarized (32V). The new relay uses negative- and zero-sequence voltage-polarized directional elements that overcome the dependability and security problems of traditional voltage-polarized elements.

Current-Polarized Directional Element (32I)

The 32I element is the traditional current-polarized directional element. The analog input quantities to this element are the operating quantity, $3I_0$, and the polarizing quantity, I_{POL} [14]. The 32I element calculates a torque-like product based on the magnitudes and the relative angle of the analog input quantities (Equation 1). The 32I element compares the result of the torque calculation, T, against present thresholds. If T is positive and above the positive threshold, the element asserts to declare a forward ground fault. If T is negative and below the negative threshold, the element asserts to declare a reverse ground fault.

$$T = |I_{POL}| \bullet |3I_0| \bullet \cos(\angle I_{POL} - \angle 3I_0) \qquad \text{Equation 1}$$

Where:

I_{POL}: Polarizing quantity

3I0: Operating quantity: $3I_0 = I_A + I_B + I_C$

All reliable directional elements require supervision. We enable the 32I element (32IE Enable bit asserts) when all of the following conditions are true:

- The zero-sequence current, I_0, is greater than the positive-sequence current, I_1, times the a_0 factor ($I_0 > a_0 \bullet I1$).

  The a_0 factor increases the 32I element security for zero-sequence currents, which circulate because of line asymmetries, slight CT saturation, etc. [15].
- The operating quantity, $3I_0$, is greater than the 50G sensitivity threshold.
- The polarizing quantity, I_{POL}, is greater than the preset sensitivity threshold.
- The E32IV programmable variable asserts (logical 1).

  The E32IV variable deasserts to identify zero-sequence source isolation [16]. The programmable variable can be set locally or remotely via command or contact input. With this control capability, events that occur locally or in remote parts of the system may control the relay to accommodate new system conditions.

Negative-Sequence Voltage-Polarized Directional Element (32Q)

The analog input quantities to this element [17] are the negative-sequence voltage, V_2, and the negative-sequence current, I_2. The 32Q element calculates the negative-sequence impedance, Z2, presented to the relay using Equation 2. If Z2 is below the Z2F threshold the 32Q element declares a forward fault. If Z2 is above the Z2R threshold the 32Q element declares a reverse fault.

$$Z2 = \frac{\mathrm{Re}\left[V_2 \bullet \left(1\angle\theta_{L2} \bullet I_2\right)^*\right]}{|I_2|^2} \qquad \text{Equation 2}$$

Where:

V_2: Negative-sequence voltage: $V_2 = \left(V_A + a^2 \bullet V_B + a \bullet V_C\right)/3$

I_2: Negative-sequence current: $I_2 = \left(I_A + a^2 \bullet I_B + a \bullet I_C\right)/3$

θ_{L2}: Line negative-sequence impedance angle

We enable the 32Q element (32QE Enable bit asserts) when all of the following conditions are true:

- The negative-sequence current, I_2, is greater than the zero-sequence current, I_0, times the k factor ($I_2 > k \bullet I_0$).

  In the event that the 32Q and 32V elements have sequence currents above their minimum current sensitivity thresholds, the relay selects the 32Q element if $I_2 > kI_0$. This check ensures that the relay uses the most robust analog quantities even if the relay sensitivity settings are not optimized.
- The negative-sequence current, I_2, is greater than the positive-sequence current, I_1, times the a2 factor ($I_2 > a_2 \bullet I_1$).

  The a2 factor increases the 32Q element security in the same way the a0 factor increases the 32I element security.
- The negative-sequence current, $3I_2$, is greater than the 50F or 50R sensitivity threshold. The relay avoids making erroneous directional decisions for low input values of $3I_2$ by requiring that $3I_2$ be greater than the 50F or 50R threshold.

Zero-Sequence Voltage-Polarized Directional Element (32V)

The 32V element is the zero-sequence analogy of the 32Q element. Equation 3 shows the algorithm used to calculate Z0. The 32V element makes directional decisions in the same way as the 32Q element. The element compares Z0 against the Z0F and Z0R thresholds to determine the direction of the ground fault.

$$Z0 = \frac{\mathrm{Re}\left[3V_0 \bullet \left(1\angle\theta_{L0} \bullet 3I_0\right)^*\right]}{\left|3I_0\right|^2} \qquad \text{Equation 3}$$

Where:

V_0: Zero-sequence voltage: $V_0 = \left(V_A + V_B + V_C\right)/3$

I_0: Zero-sequence current: $I_0 = \left(I_A + I_B + I_C\right)/3$

θ_{L0}: Line zero-sequence impedance angle

We enable the 32V element (32VE Enable bit asserts) when all of the following conditions are true:

- The zero-sequence current, I_0, is greater than the positive-sequence current, I_1, times the a_0 factor ($I_0 > a_0 \bullet I_1$).

  The circulating zero-sequence currents, which are due to line asymmetries, are typically less than the circulating negative-sequence currents for most phase conductor configurations [15]. Thus, the a_0 factor is usually smaller than the a_2 factor. Because of this fact, we can set the 32V element more sensitively than the 32Q element in nontransposed line applications where severe CT saturation is not a possibility.
- The residual current, $3I_0$, is greater than the 50F or 50R sensitivity threshold.
- The E32IV programmable variable asserts (logical 1).

The GDR uses the status of the 32IE, 32QE, and 32VE Enable bits in the relay priority logic to select the optimal directional element to run. This priority logic is explained later in this paper.

32Q and 32V Element Operation for Ground Faults

The way that the 32Q and 32V elements declare forward and reverse ground faults is similar. Let us examine the 32Q element operation for forward and reverse ground faults in a two-source system. Figure 4 shows the relay negative-sequence voltage, V_2, and negative-sequence current, I_2, for a ground fault at the remote terminal. I_2 is the current contribution from the local end. Notice that the primary current I_2 is flowing in at the CT polarity mark. At the relay location, $V_2 = -I_2 \cdot Z_{S2}$. If the negative-sequence impedance angles, $\angle Z_{S2}$ and θ_{L2}, are the same, the calculated Z2 quantity is $Z2 = -|Z_{S2}|$.

Figure 5 shows the relay quantities, V_2 and I_2, for a reverse ground fault. The polarity of V_2 is the same as for forward ground faults. For reverse faults, the relay current I_2 is the contribution from the remote end. The primary current I_2 is flowing out at the CT polarity mark. At the relay location, $V_2 = I_2 \bullet (Z_{L2} + Z_{R2})$. If the angles, $\angle (Z_{R2} + Z_{L2})$ and θ_{L2}, are the same, the calculated Z2 quantity is $Z2 = |Z_{L2}+Z_{R2}|$.

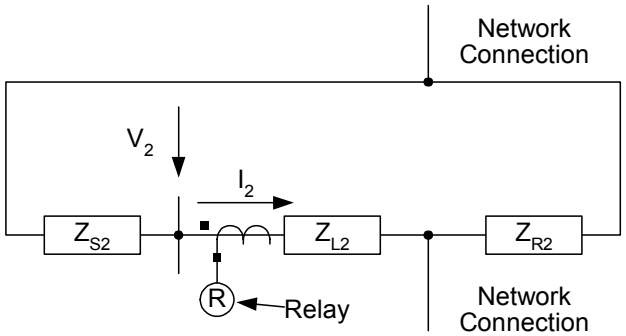

Figure 4 Relay Negative-Sequence Voltage, V_2, and Negative-Sequence Current, I_2, for a Ground Fault at the End-Of-Line

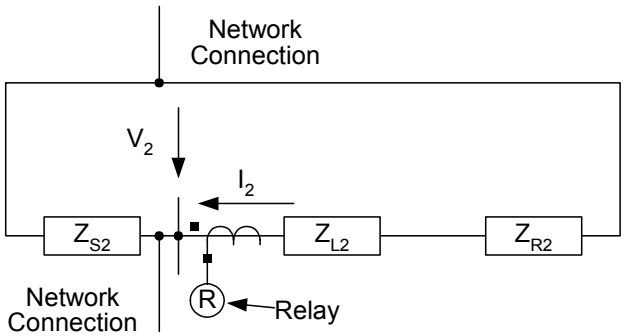

Figure 5 Relay Negative-Sequence Voltage, V_2, and Negative-Sequence Current, I_2, for a Ground Fault Behind the Relay

After the Z2 calculation, the relay compares Z2 against the forward and reverse thresholds (Z2F and Z2R, respectively) to make the fault direction declaration. The Z2F threshold must be greater than the maximum Z2 result for forward faults (Z2F > Z2). The Z2R threshold must be less than the minimum Z2 result for reverse faults (Z2R < Z2). The 32V element does identical comparison of Z0 with thresholds Z0F and Z0R. Figure 6 shows the operating characteristics of the 32Q (Figure 6(a)) and 32V (Figure 6(b)) elements, and also the measured impedance for forward and reverse faults. For the 32Q element we use Z_{L1} instead of Z_{L2} in Figure 6(a). Recall that $Z_{L1} = Z_{L2}$ for lines.

One of the advantages of the 32Q and 32V elements is that the element sensitivity does not depend on the voltage magnitude at the relay location. For this reason, the elements can be applied in very strong systems where the magnitudes of V_2 and V_0 are very small.

Selecting the Optimal Directional Element (Best Choice Directional Element)

Each of the three directional elements, 32I, 32Q, and 32V, has advantages and disadvantages for various system conditions [18]. The relay selects the optimal directional element for a particular system configuration according to the selected processing sequence and the enable variables, 32IE, 32QE, and 32VE.

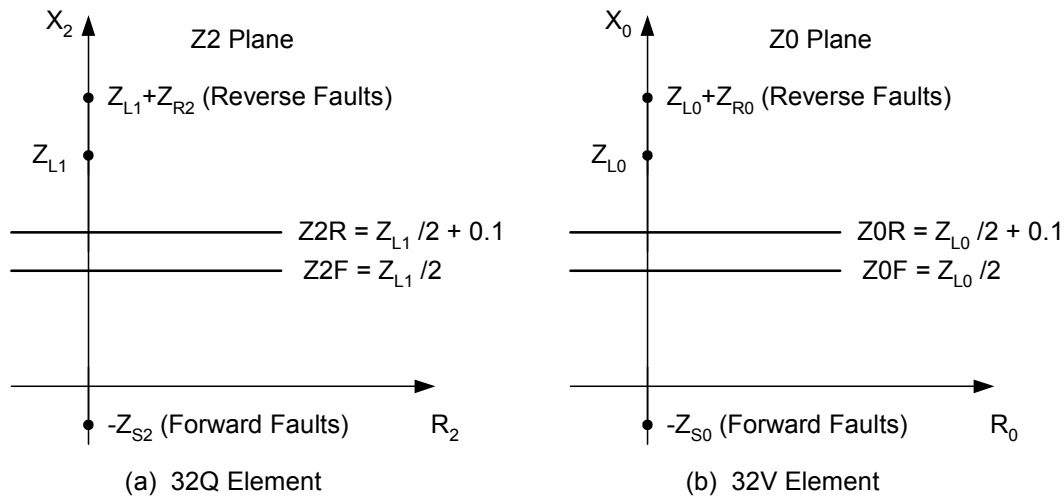

Figure 6 Operating Characteristics of the 32Q and 32V Directional Elements

A setting called ORDER uses the enables described earlier to determine the directional element processing sequence. Assign 32I, 32V, or 32Q enable elements to these variables in the desired sequence. For example, assigning ORDER=32IE, 32QE, 32VE sets the element processing sequence as 32I first, 32Q next, and 32V last.

With this processing sequence, the relay uses 32I when I_{POL} and $3I_0$ are above the sensitivity thresholds. If the currents do not exceed these thresholds, the 32IE variable does not assert. The relay then proceeds to the 32Q element and checks the status of 32QE. If 32QE does not assert, the relay next checks the status of 32VE. The relay uses the k factor in the 32QE variable to select the most reliable sequence current, I_2 or I_0, in making the directional decision.

In the automatic setting mode, the GDR provides settings for the 32Q and 32V directional elements. This feature simplifies the relay setting procedure.

The relay selects the most suitable settings from given system parameters. For example, the relay uses the line impedance parameters to set the Z2F, Z2R, Z0F, and Z0R thresholds used in the 32Q and 32V elements.

Figure 6 shows the calculated sequence impedances, Z2 and Z0, for forward and reverse faults. If we assume infinite sources at both line ends, the line impedance separates the calculated impedances for forward and reverse faults. To safely discriminate between forward and reverse faults, we can set the forward and reverse thresholds at one-half of the corresponding sequence line impedance. The relay sets Z2F to $Z_{L1}/2$ Ω, and Z2R to $Z_{L1}/2+0.1$ Ω. Z0F and Z0R are set

the same as Z2F and Z2R except the relay uses the zero-sequence line impedance, Z_{L0}, instead of the positive-sequence line impedance, Z_{L1}. These voltage directional element threshold settings guarantee that the relay makes the correct directional decisions for any source-switching conditions.

The relay automatic mode sets the a_0 and a_2 factors to 0.1. These conservative settings make the directional elements secure under almost all transmission line configurations while allowing sensitive settings for 50F and 50R. The relay automatic selection mode sets 50F to 0.5 A and 50R to 0.25 A. The 50R setting is more sensitive for reverse faults than for forward faults. For example, Directional Comparison Blocking (DCB) schemes require more sensitive reverse elements than forward elements.

UNGROUNDED DISTRIBUTION SYSTEM ANALYSIS

In this section we analyze the steady-state behavior of ungrounded systems in both the phase and the symmetrical component domains.

Three-Phase Analysis

Figure 7 shows a simplified representation of a three-phase ungrounded distribution system. The relay location defines the protected line. All the other distribution lines are lumped in an equivalent line representing the remainder of the distribution system. For simplification in our steady-state analysis, we assume ideal sources operating at nominal frequency and no load, and disregard line series impedances, resistance and reactance. We justify disregarding load on the basis that all loads for these systems must be connected phase-to-phase and thereby do not generate any zero-sequence unbalance. These assumptions introduce no significant error in the results but greatly simplify the calculations.

In Figure 7, C_{AL}, C_{BL}, and C_{CL} represent the phase-to-ground capacitances of the protected line, and C_{AS}, C_{BS}, and C_{CS} are the phase-to-ground capacitances of the remaining network. We do not represent the phase-to-phase capacitances of the system in Figure 7 because they do not contribute to the residual current and so are irrelevant to this analysis.

Using the circuit of Figure 7, we may write:

$$\vec{I}_{AL} + \vec{I}_{BL} + \vec{I}_{CL} + \vec{I}_{AS} + \vec{I}_{BS} + \vec{I}_{CS} = 0 \qquad \text{Equation 4}$$

The relay element measures the residual current $3I_{0L}$ of the protected line. From Equation 4:

$$3\vec{I}_{0L} = \vec{I}_{AL} + \vec{I}_{BL} + \vec{I}_{CL} = -(\vec{I}_{AS} + \vec{I}_{BS} + \vec{I}_{CS}) \qquad \text{Equation 5}$$

We may represent the occurrence of a forward solid A-phase fault in the system of Figure 7 by closing Switch S_F. In this case, the fault current I_F equals I_{AL}:

$$I_F = \vec{I}_{AL} = -(\vec{I}_{BL} + \vec{I}_{CL} + \vec{I}_{AS} + \vec{I}_{BS} + \vec{I}_{CS}) \qquad \text{Equation 6}$$

From Equation 6, we see that the residual current measured by the relay is actually the residual current supplied by the remainder of the system. This also shows us that if the protected line were the only feeder connected to the bus, the residual current measured by the relay would equal zero (i.e., $3I_0 = I_{AL} - (I_{BL} + I_{CL}) = 0$). For this switching configuration, detecting a ground fault is easily accomplished with a simple zero-sequence overvoltage element.

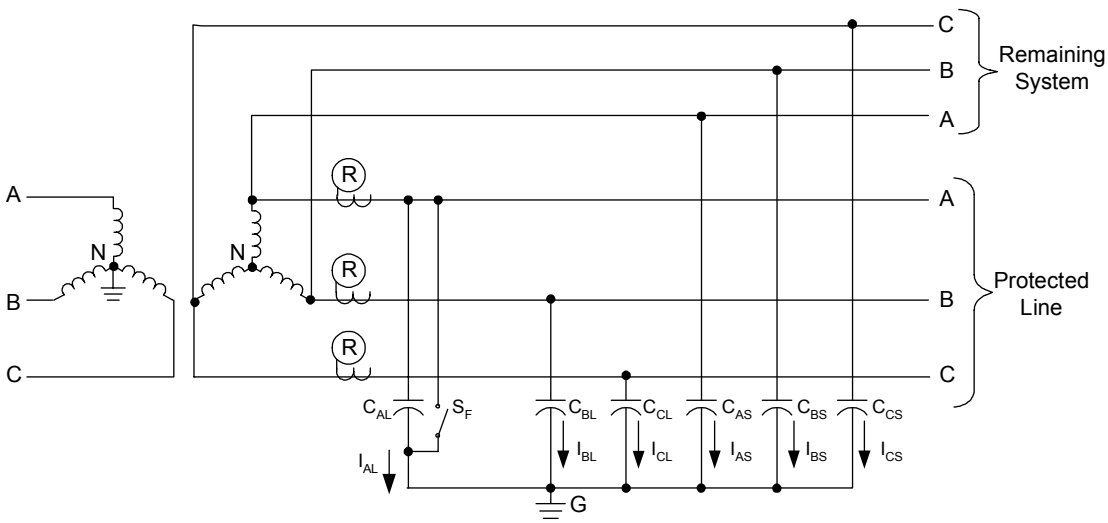

Figure 7 Three-Phase Simplified Representation of an Ungrounded Network

In a symmetrical unfaulted system the residual current for the protected line is zero, $3I_{0L} = 0$, and the system neutral N is at ground potential, $V_{NG} = 0$, (see Figure 8(a)). Natural system asymmetry produces some neutral current and shifts the system neutral from the ideal ground potential of $V_{NG} = 0$.

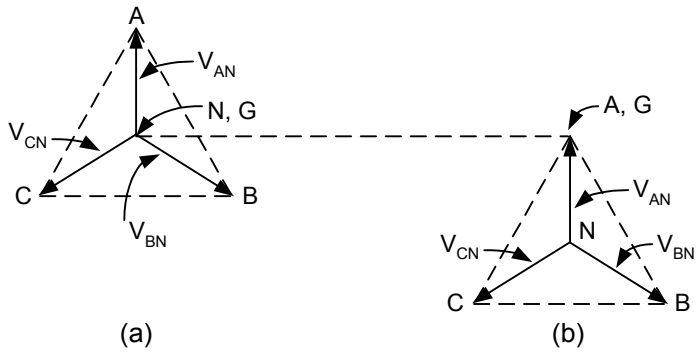

Figure 8 Voltage Phasor Diagrams for the System of Figure 7: (a) Unfaulted System, (b) Faulted System (Solid A-Phase Fault, R_F=0)

For a solid A-phase-to-ground fault, $R_F = 0$, in the ideal lossless system, the faulted phase and ground potential are equal (see Figure 8(b)). The phase-to-ground voltage of the two remaining unfaulted phases equals the phase-to-phase voltage ($V_{BG} = V_{BA}$, $V_{CG} = V_{CA}$) and the neutral-to-ground voltage equals the negative of the source phase-to-neutral voltage corresponding to the faulted phase ($V_{NG} = -V_{AN}$).

Symmetrical Component Analysis

The phase-domain analysis provides an exact representation of the ungrounded system, which is valid even for asymmetrical systems. However, ground fault detection methods are typically based on zero-sequence quantities. It is then also important to outline a symmetrical-component-domain analysis of ungrounded systems operating in steady-state. If we consider that a ground directional relay relying on phase quantities would be supplied by high ratio phase current transformers (CTs), we immediately see that the need to size the phase CT ratio to sustain full

load current automatically makes such a design less sensitive than a design that can use a lower ratio core-flux summing CT.

The zero-sequence impedance of an ungrounded system has a very high magnitude. This high value permits us to ignore the positive- and negative-sequence impedances without significant loss of accuracy when evaluating single line-to-ground faults. Figure 9 shows an approximate zero-sequence representation of the forward ground fault in the system depicted in Figure 7 (Switch S_F closed). We assume that the system is symmetrical ($C_{AL} = C_{BL} = C_{CL} = C_L$, $C_{AS} = C_{BS} = C_{CS} = C_S$), and consider that the Thevenin voltage, the prefault voltage at the fault point, is equal to the nominal, phase-to-neutral, system voltage, V_{nom}.

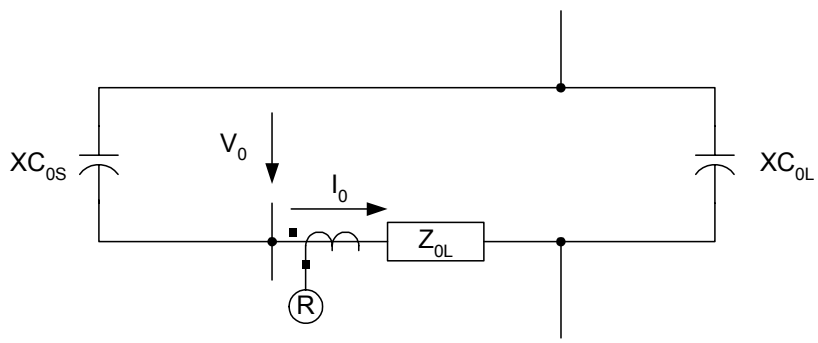

Figure 9 Zero-Sequence Network for the Forward Ground Fault in Figure 7 System

Note that in Figure 9 the relay measures V_0 across XC_{0S} and the current I_0 through XC_{0S}, where XC_{0S} is the zero-sequence capacitive reactance of the remaining system in Figure 7. The primary current I_0 is flowing in at the CT polarity mark. At the relay location, $V_0 = -I_0 \bullet (-jXC_{0S}) = jXC_{0S}I_0$. If the relay calculates Z0 according to Equation 3, with $\theta_{L0} = 90°$, for this forward fault the resulting Z0 value is + XC_{0S}.

Figure 10 shows the zero-sequence network corresponding to a reverse fault in the system depicted in Figure 7. The relay measures V_0 across the series combination $Z_{0L} - jXC_{0L}$, and the current I_0 through the same series combination, where Z_{0L} is the zero-sequence line impedance and XC_{0L} is the zero-sequence capacitive reactance of the protected line. The primary current I_0 flows out of the CT polarity mark for this reverse fault. At the relay location, $V_0 = I_0 \bullet (Z_{0L} - jXC_{0L})$. Typically $XC_{0L} >> Z_{0L}$, so a good approximation is $V_0 = -jXC_{0L}I_0$. The resulting Z0 value for the reverse fault is $-XC_{0L}$.

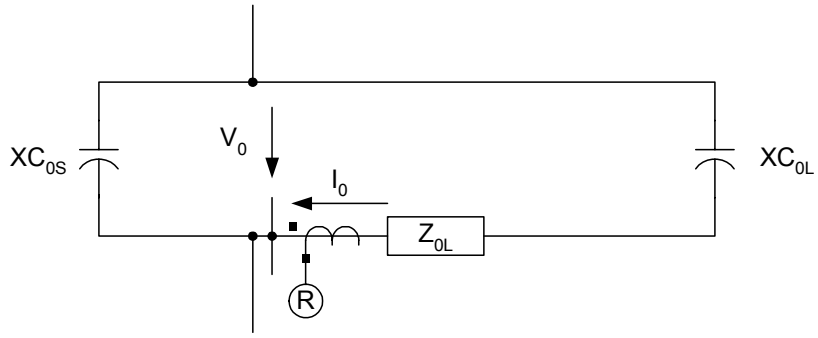

Figure 10 Zero-Sequence Network for the Reverse Ground Fault in Figure 7 System

Figure 11(a) shows the phasor diagram for forward and reverse faults in the system shown in Figure 7. Figure 11(b) shows a patent-pending directional element characteristic for ungrounded

systems (32U). The function of a directional element is to determine forward and reverse conditions: i.e., differentiate $+XC_{0S}$ from $-XC_{0L}$. This new element does this with two thresholds set between these two impedance values. If the measured impedance is above the forward threshold (and all of the supervisory conditionals are met), the fault is declared forward.

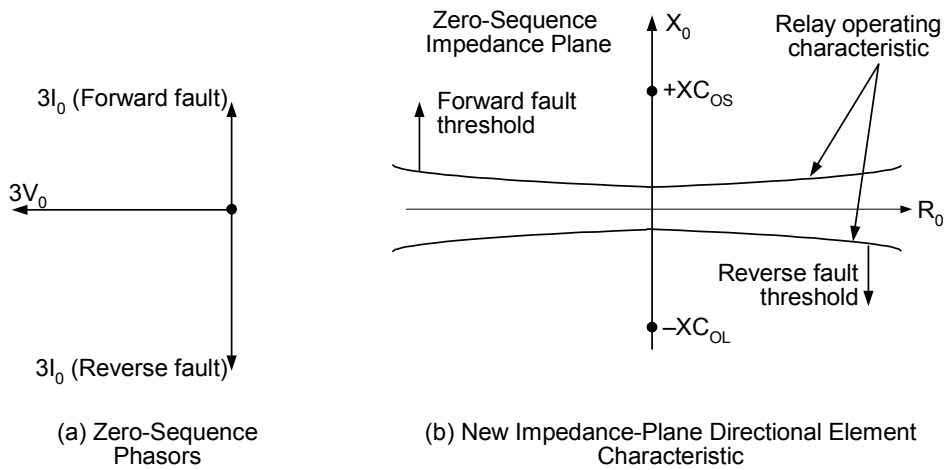

Figure 11 New Ungrounded System Ground Directional Element (32U) Characteristic

System Unbalance Affects Sensitivity

CT inaccuracies could adversely affect directional element sensitivity. Similarly, if the line-ground capacitances are not equal, the system produces standing or unfaulted zero-sequence quantities. Typically these quantities are small, but in a very large system the cumulative effect of unequal capacitances can generate appreciable zero-sequence voltage. To preserve fault resistance sensitivity, do not use a zero-sequence overvoltage element to supervise the directional element.

Let us review the effect of zero-sequence voltage supervision on ground relaying sensitivity. For this example, assume the end-of-line ground fault shown in Figure 12 delivers 5 mA of secondary current to the relay on a system where the nominal secondary line-neutral voltage is 66.4 V.

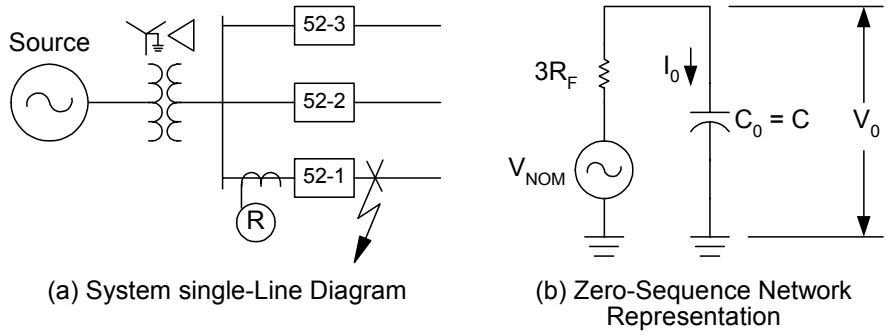

Figure 12 Zero-Sequence Overvoltage Sensitivity Example

From Figure 12(b):

$$V_0 = I_0 \bullet \frac{1}{j\omega \cdot C} \qquad \text{Equation 7}$$

$$C = \frac{I_0}{j\omega \bullet V_0} \qquad \text{Equation 8}$$

Next, set the minimum V_0 at 2 V for a starting place to calculate C in Equation 8, given a minimum I_0 of 5 mA. If we do this for a 60 Hz system, C = 6.63 μF. Then, let us evaluate another similar system, but with Breaker 3 (52–3) closed to increase C. If this new system only produced 5 mA secondary and the capacitance equaled 13.26 μF, then $|V_0| = 1$ V secondary. Given a $3V_0$ threshold of 6 V secondary, the relay using supervisory zero-sequence overvoltage would not operate because of an incorrect supervisory setting.

Looking again at Figure 12, we can calculate R_F as:

$$R_F = \frac{V_{NOM} - V_0}{3 \bullet I_0} \qquad \text{Equation 9}$$

As shown in Equation 9, raising the V_0 threshold decreases the numerator and thereby decreases the available fault resistance coverage, or sensitivity, for a given minimum magnitude of I_0. An alternative to $3V_0$ security supervision is to require the ratio of residual current to positive-sequence current to exceed a minimum scalar threshold value. The benefit of this supervision is that the minimum sensitivity of each feeder relay is not dependent upon the total system unbalance.

NEW UNGROUNDED DIRECTIONAL ELEMENT PERFORMANCE

To demonstrate the performance of this new ground directional element for ungrounded systems we modeled a distribution power system using EMTP (Electromagnetic Transients Program). Figure 13 shows the simulated system and the placement of an A-phase-to-ground fault with R_F = 10 kΩ. All of the seven feeders are overhead lines with differing lengths.

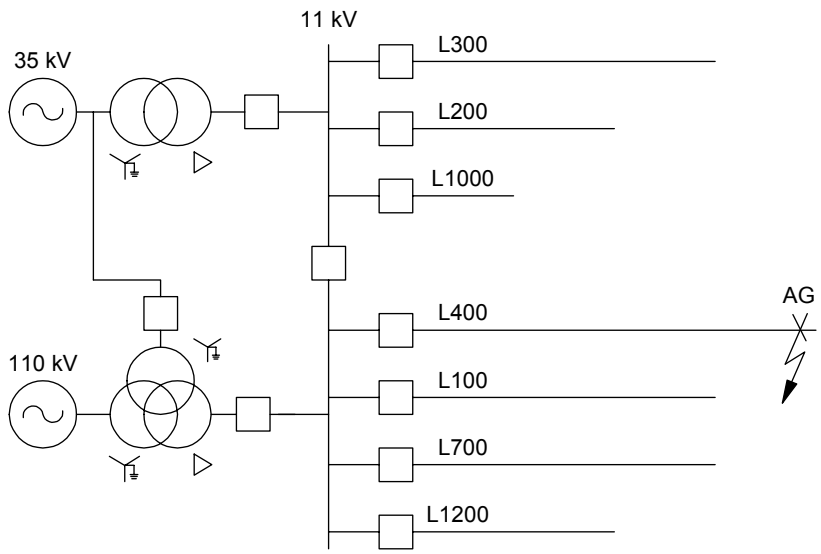

Figure 13 Ungrounded System Single-Line Diagram

Figure 14 shows the zero-sequence voltage and current presented to the relay on Feeder L400. Fault inception is at cycle 18. From the upper plot (V_0 = 1.5 V), notice that the high R_F restricted the available $3V_0$ to only 4.5 V secondary.

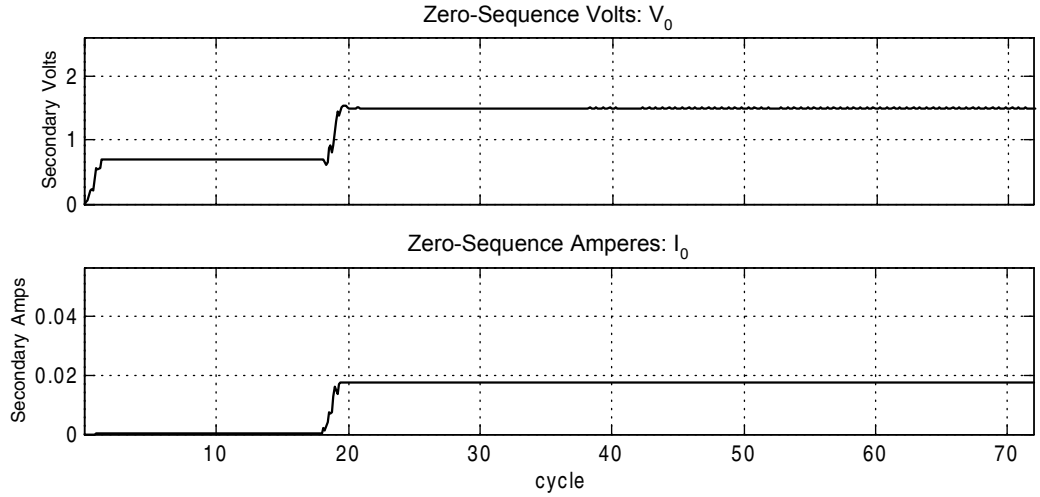

Figure 14 Line L400 Zero-Sequential Voltage and Current for End-of-Line AG Fault, R_F = 10 kΩ

Figure 15 shows the new directional element calculation results for this fault (the results prior to fault inception are erroneous because there is no prefault zero-sequence current). Note that the forward directional decision is very stable after the current magnitude rises above the minimum threshold of 5 mA (indicated by the thicker line in the plot).

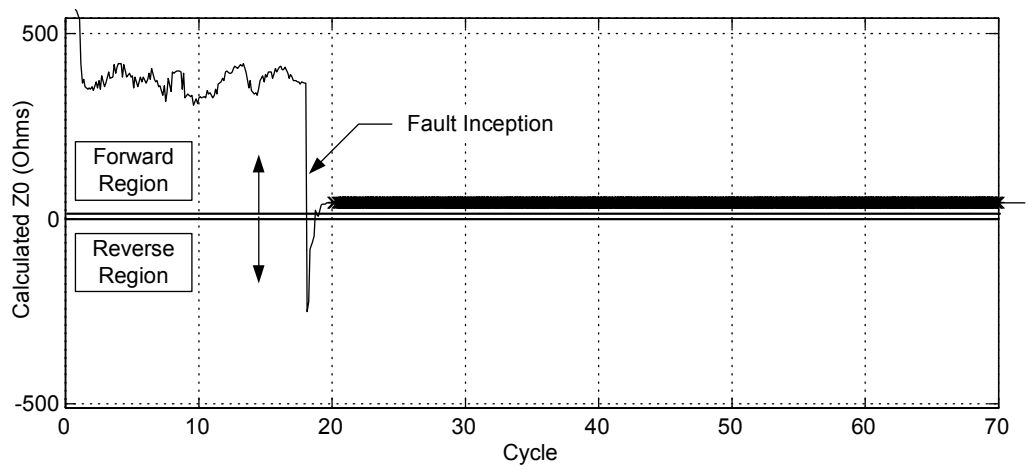

Figure 15 Line L400 Relay New Ungrounded System Directional Element (32U) Calculates Forward Direction Independent of Fault Resistance

COMPENSATED DISTRIBUTION SYSTEM ANALYSIS

Operation analysis of compensated distribution networks is important for identifying the available alternatives for ground fault detection in these systems. In this section we analyze the steady-state behavior of compensated systems both in the phase and in the symmetrical component domains. We also summarize the harmonic content and the transient behavior of these systems.

Three-Phase Analysis

Figure 16 shows a simplified representation of a three-phase compensated distribution system in which all the feeders appear in a single circuit. Again, for simplification in our steady-state analysis, we assume ideal sources operating at nominal frequency and no load, and disregard line series impedances, resistance and reactance.

We represent the Petersen coil in Figure 16 as a parallel combination of an inductance (L_N) and a resistance (R_N). This configuration is the equivalent parallel circuit of the coil (the coil inductance and resistance are actually in series). This same combination may also represent the equivalent circuit for the case in which we connect a resistor in parallel with the Petersen coil or to an auxiliary winding of the coil. In Figure 16, C_A, C_B, and C_C represent the phase-to-ground capacitances of the network. Resistances R_A, R_B, and R_C represent the phase-to-ground leakage resistances. Both the capacitance and leakage resistance values could be different for the different phases, especially for overhead lines, which means that the system may be asymmetrical. Typical values of the phase-to-ground leakage resistances are approximately ten to 20 times the phase-to-ground capacitive reactances [3]. We do not represent the phase-to-phase capacitances of the system in Figure 16 because they do not contribute to the residual current and so are irrelevant to this analysis.

We may represent the occurrence of an A-phase fault in the system of Figure 16 by closing Switch S_F. R_F represents the fault resistance. For solid faults $R_F = 0$.

To discuss the basic principles of resonant grounding [19], we can disregard all active losses in the equivalent circuit of Figure 16 ($R_N = R_A = R_B = R_C \rightarrow \infty$). Using the circuit of Figure 16, we can calculate the current through the system grounding I_{NG} using the phase currents as:

$$\vec{I}_{NG} + \vec{I}_{AG} + \vec{I}_{BG} + \vec{I}_{CG} = 0 \qquad \text{Equation 10}$$

$$\vec{I}_{NG} = -(\vec{I}_{AG} + \vec{I}_{BG} + \vec{I}_{CG}) \qquad \text{Equation 11}$$

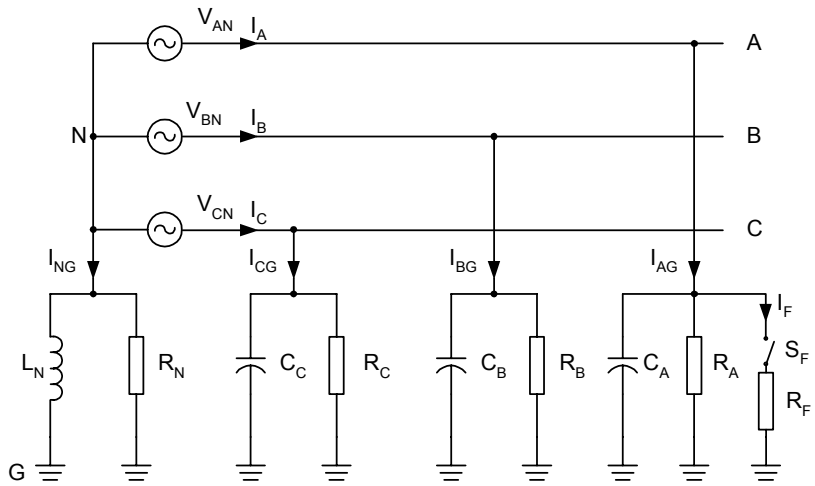

Figure 16 Three-Phase Simplified Representation of a Resonant Grounded Network

In a symmetrical unfaulted system the neutral current is zero ($I_{NG} = 0$) and the system neutral N is at ground potential ($V_{NG} = 0$), similar to that of the ungrounded system voltage phasor diagram shown in Figure 8(a). Natural system asymmetry produces some neutral current and shifts the system neutral from the ideal ground potential of $V_{NG} = 0$. For a solid A-phase-to-ground fault ($R_F = 0$) in the ideal lossless system, the faulted phase and ground potential are equal. The phase-to-ground voltage of the two remaining unfaulted phases equals the phase-to-phase voltage ($V_{BG} = V_{BA}$, $V_{CG} = V_{CA}$) and the neutral-ground voltage equals the negative of the source phase-to-neutral voltage corresponding to the faulted phase ($V_{NG} = -V_{AN}$).

For the solid fault in Figure 16, calculate the total fault current, I_F:

$$\vec{I}_F = \vec{I}_{AG} = -\vec{I}_{NG} - (\vec{I}_{BG} + \vec{I}_{CG}) \qquad \text{Equation 12}$$

Note that I_{NG} is 180 degrees out-of-phase with respect to ($I_{BG} + I_{CG}$) in the ideal lossless system. By selecting the appropriate Petersen coil inductance, we can theoretically reduce the fault current to zero. This is the tuning, or compensation, condition, in which the system is in parallel resonance:

$$\left|\vec{I}_{NG}\right| = \left|\vec{I}_{BG} + \vec{I}_{CG}\right| \qquad \text{Equation 13}$$

For an off-tuned system, in other words a system not 100 percent tuned, the two possible operating conditions are:

$$\left|\vec{I}_{NG}\right| > \left|\vec{I}_{BG} + \vec{I}_{CG}\right| \quad \text{(overcompensated system)} \qquad \text{Equation 14}$$

$$\left|\vec{I}_{NG}\right| < \left|\vec{I}_{BG} + \vec{I}_{CG}\right| \quad \text{(undercompensated system)} \qquad \text{Equation 15}$$

In a system with losses, the 100 percent tuning condition does not result in a zero-ampere fault condition. For these systems the coil and system active losses, and the amount of R_F, determine the ground fault current magnitude.

If $R_F \neq 0$, the current through the fault is only a portion of the faulted phase current (i.e., $I_F \neq I_{AG}$ for an A-phase fault). We can represent the fault inception as a change in the faulted phase admittance [19][20]. In this case the magnitude of the neutral voltage shift as a result of the fault is less than the source phase-to-neutral voltage ($V_{NG} < V_{AN}$).

The normalized neutral-to-ground voltage [12][19] for the system of Figure 16 is given by:

$$\frac{\vec{V}_{NG}}{V_{nom}} = -\frac{\vec{Y}_A + a^2\vec{Y}_B + a\vec{Y}_C}{\vec{Y}_N + \vec{Y}_A + \vec{Y}_B + \vec{Y}_C} \qquad \text{Equation 16}$$

Where V_{nom} is the nominal system voltage, $a = 1\angle 120°$, $a^2 = 1\angle -120°$, and

$$\vec{Y}_A = G_A + jB_A = \frac{1}{R_A} + j\omega C_A \quad \text{(A-phase-to-ground admittance)} \qquad \text{Equation 17}$$

$$\vec{Y}_N = G_N + jB_N = \frac{1}{R_N} + \frac{1}{j\omega L_N} \quad \text{(Neutral admittance)} \qquad \text{Equation 18}$$

$$R_N = \frac{R^2 + \omega^2 L^2}{R} \qquad \text{Equation 19}$$

$$L_N = \frac{R^2 + \omega^2 L^2}{\omega^2 L} \qquad \text{Equation 20}$$

where R and L are the Petersen coil resistance and inductance, respectively.

For the faulted system (Switch S_F of Figure 16 closed), all parameters remain unchanged except the A-phase admittance (Y_A). We represent Y_A for the faulted system as:

$$\vec{Y}_A = \frac{1}{R_F} + \frac{1}{R_A} + j\omega C_A \qquad \text{Equation 21}$$

As a result, the fault changes both the magnitude and phase of the neutral-ground voltage V_{NG}. However, the phase changes are not a clear indicator of the fault, and the magnitude changes could be very small or even negative for high-resistance faults. As a result, faults can enhance system balance instead of perturbing it. This represents a limit to the sensitivity of the fault detection based on the magnitude of the neutral-to-ground voltage. The variation of this voltage, incremental neutral-to-ground voltage, is a better indicator of the fault. The value of this voltage is free from the prefault normal system unbalance; however, the voltage could be affected by system switching operations such as connection or disconnection of distribution lines, by tap-changing operations, or by resistor insertion in the Petersen coil.

Symmetrical Component Analysis

Ground fault detection methods are typically based on zero-sequence quantities. So, it is also important to outline a symmetrical-component-domain analysis of compensated systems operating in steady-state.

The zero-sequence impedance of a compensated system has a very high magnitude. This high value permits us to ignore the positive- and negative-sequence impedances without significant loss of accuracy when evaluating single line-to-ground faults. Thus, we represent the ground fault by connecting an equivalent Thevenin source in series with a resistance at the point of fault in the zero-sequence network. Figure 17 shows an approximate zero-sequence representation of a ground fault in the system depicted in Figure 16. We assume that the system is symmetrical ($C_A = C_B = C_C = C$), disregard the leakage resistances ($R_A = R_B = R_C \rightarrow \infty$), and consider that the Thevenin voltage, prefault voltage at the fault point, is equal to the nominal, phase-to-neutral system voltage, V_{nom}.

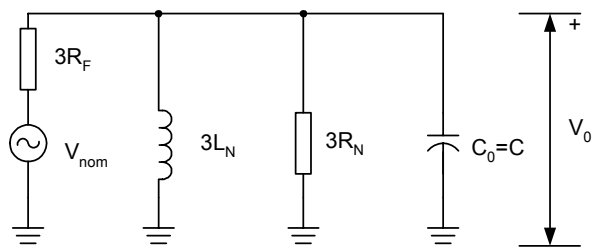

Figure 17 Zero-Sequence Representation of a Ground Fault in Figure 16 System

From Figure 17 we obtain:

$$\frac{\vec{V}_0}{V_{nom}} = \frac{1}{1 + \frac{R_F}{R_N} + j3R_F(\omega C - \frac{1}{3\omega L_N})} \qquad \text{Equation 22}$$

For ground faults the system zero-sequence voltage equals the neutral-to-ground voltage [10]. Then, Equation 22 is the zero-sequence version of Equation 16 for a symmetrical system if we disregard leakage resistances.

Figure 18(a) shows a single-line diagram of a compensated radial distribution system in which the relay location defines the protected line. All of the other distribution lines are lumped in an equivalent impedance representing the remainder of the distribution system.

Figure 18(b) is an approximate zero-sequence representation of the system. C_{0L} and R_{0L} are the protected line zero-sequence capacitance and leakage resistance, respectively. C_{0S} and R_{0S} are the corresponding values for the remainder of the system. In this case $C_0 = C_{0L} + C_{0S}$ and $1 / R_0 = 1 / R_{0L} + 1 / R_{0S}$, where C_0 and R_0 are the system zero-sequence capacitance and leakage resistance, respectively.

Again, we represent the fault by connecting an equivalent Thevenin source in series with a resistance. In Figure 18(b) we close Switch S_F to represent a ground fault on the protected line (forward fault direction from the perspective of the relay) and close Switch S_R to represent a ground fault elsewhere in the system (reverse direction fault).

We may also approximately represent system unbalance by connecting an equivalent Thevenin source in series with an impedance in the zero-sequence network. In Figure 19(a), Z_{LU} represents the unbalance of the protected line and Z_{SU} is the unbalance impedance corresponding to the rest of the system. At the relay side the unbalance includes the primary system neutral asymmetry and the additional unbalance introduced by the current transformers.

In the typical residual connection of the relay to three phase current transformers (CTs) the measurable zero-sequence current is corrupted by CT errors; the CT phase-angle error is particularly influential in this case. The Holmgreen connection of the CTs is a residual connection of the relay to phase CTs that are specially matched to reduce the residual current measurement error.

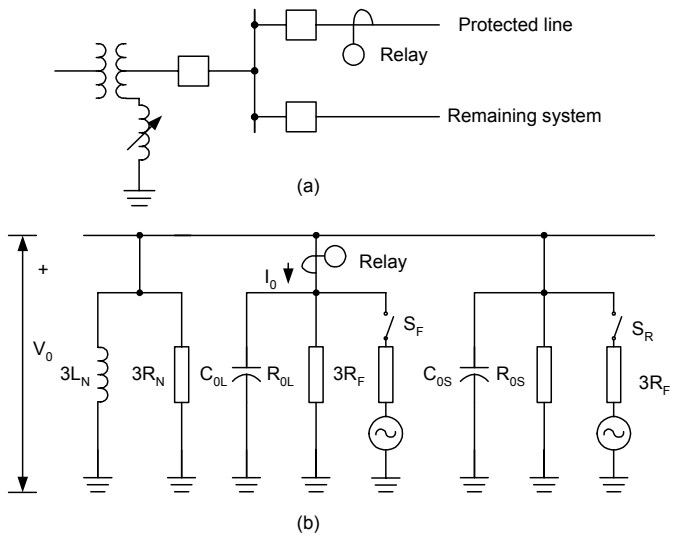

Figure 18 Compensated Distribution System: (a) Single-Line Diagram, (b) System Zero-Sequence Network

By far the best solution is the flux-summation or window-type CT, because it transforms the zero-sequence current directly and therefore does not include the cumulative error of the phase CTs. In addition, the CT ratio may be as low as 10:1, thus providing a significant increase in secondary current delivered to the protective relay. Hence, increasing the zero-sequence current means more sensitivity for ground faults.

It is possible to determine the unbalance impedances Z_{LU} and Z_{SU} or their corresponding admittances Y_{LU} and Y_{SU}. The admittance method for sensitive ground fault detection in compensated distribution circuits [4] requires the protective instruments to calculate these admittance values for the prefault system for use as a reference. The same calculation is also the reference for a residual current compensation method in resonant systems [12]. To calculate the unbalance admittances, you must have system information for two different tuning conditions. Typically, this means the protective instrument must control the Petersen coil. An obvious restriction to this requirement is that the protective instrument must be located within the substation, unless we include fast and secure external communication in the protection scheme.

A new approach to this problem is to exclude the effect of the unbalance from the zero-sequence network by using incremental, or delta, quantities [21]. The advantages of this method are that it does not require Petersen coil control and that it uses information from the protected line. Thus, the new type of protective relay can be located elsewhere in the system without the need for dedicated communications channels. The incremental zero-sequence voltage (ΔV_0) and current (ΔI_0) are:

$$\Delta\vec{V}_0 = \vec{V}_{0,\text{FAULT}} - \vec{V}_{0,\text{PRE-FAULT}} \qquad \text{Equation 23}$$

$$\Delta\vec{I}_0 = \vec{I}_{0,\text{FAULT}} - \vec{I}_{0,\text{PRE-FAULT}} \qquad \text{Equation 24}$$

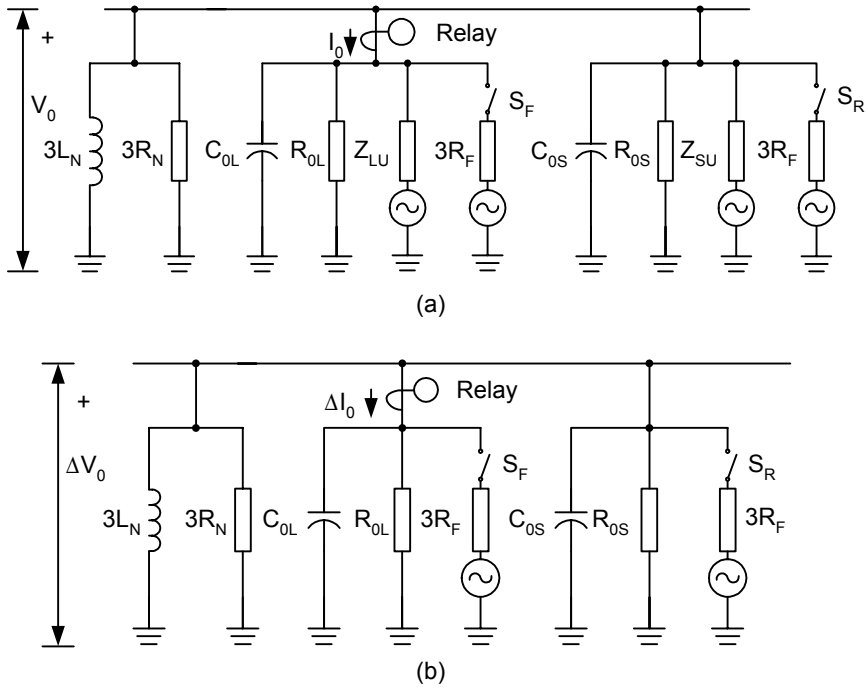

Figure 19 Zero-Sequence Network for the System of Figure 18(a) Considering System Unbalance: (a) Total Quantities, (b) Incremental Quantities

Figure 19(b) depicts the zero-sequence system network for incremental quantities. Note that it only shows those components necessary for calculating fault quantities. The results are independent from the natural system asymmetry and from CT errors. The latter feature permits a relay with this new means of ground fault detection to be used with conventional CTs. While the incremental quantities do reduce the zero-sequence current measurement error, this method cannot overcome the problem of extremely low zero-sequence current being presented to the relay because of the large ratios used for the phase CTs.

Ground Faults in Compensated Distribution Networks

The self-extinction mechanism for arcing ground faults in cable lines is not as effective as in overhead lines because cable insulation breakdown is generally definitive. Even if the arc self-extinguishes during the current zero-crossings, the damaged insulation fails again when the instantaneous phase-to-ground voltage reaches a level higher than the damaged dielectric withstand level. The result is a restriking fault. Restriking ground faults produce repetitive overvoltages in the unfaulted phases that can eventually lead to these phases faulting to create a cross-country fault. Given the low probability of self-clearing, many utilities trip, without reclosing, cable distribution lines when the protection detects a ground fault. Another solution is to introduce residual current compensation in the Petersen coil control system [12]. This system reduces the ground fault current to zero, thus reducing the restriking mechanism. It is then possible to operate the system with a faulted cable.

In summary, the basic types of ground faults in compensated distribution networks are self-clearing faults, restriking faults, and sustained faults. Restriking faults are self-clearing faults that become repetitive as a result of permanent insulation breakdown. Sustained faults include all permanent faults and some temporary faults not cleared by the arc-extinction mechanism of resonant grounding.

GROUND FAULT DETECTION METHODS FOR COMPENSATED DISTRIBUTION NETWORKS

Ground fault detection methods for compensated distribution networks may be classified according to the components of the relay input signals that they use to detect the fault. For this discussion, we grouped the methods into the following four classifications:

1. Fundamental frequency
2. Harmonic based
3. Transient-components based
4. Other

Methods included in the first two groups use information corresponding to the steady-state of the faulted distribution network; some of these methods also require steady-state prefault information. Group 3 methods use information on the transient process generated by the fault. Group 4 includes methods that basically use steady-state information, but require control actions on the Petersen coil, either current injection or temporary detuning.

Voltage Detection

Ground faults in compensated systems reduce the line-to-ground voltage of the faulted phase and shift the system neutral, increasing the system zero-sequence voltage in most cases. Both the zero-sequence voltage and the phase-to-ground voltages have been used as indicators of ground faults [3][9]. However, for high-resistance faults the voltage change could be very small. Some researchers have proposed using the incremental zero-sequence voltage in order to increase the detection sensitivity[19].

Another problem is that the zero-sequence voltage has almost the same value in the entire distribution network. The voltage drops caused by the zero-sequence currents circulating through the zero-sequence impedances of the lines and transformers are very small as compared to the voltage drops across the phase-to-ground system impedances. In other words, voltage-based ground fault detection methods are not selective. They detect the ground fault, but do not determine the faulted element. It is then necessary to manually disconnect and reclose every feeder of the substation to locate the fault. These short service interruptions represent a power quality problem. For this reason, voltage detection is typically used as a starting function of selective ground fault detection methods in compensated distribution networks.

Wattmetric Method

Selective ground-fault detection methods require current information. Zero-sequence directional relays are a classical solution [2][3][9]. For ungrounded networks the varmetric relay responds to the quadrature (imaginary) component of the zero-sequence current with respect to the zero-sequence voltage [2][9]. For compensated networks the wattmetric relay uses the in-phase (real) component of the zero-sequence current [2][3].

We may analyze these fault-detection methods, referring to the system depicted in Figure 18(a). Figure 18(b) shows the approximate zero-sequence representation for the balanced version of the system.

For a forward fault, such as Switch S_F closed and Switch S_R open in Figure 18(b), the relay zero-sequence current, I_0, is:

$$\vec{I}_0 = -\vec{V}_0\left[\left(\frac{1}{R_{0S}} + \frac{1}{3R_N}\right) + j\left(\omega C_{0S} - \frac{1}{3\omega L_N}\right)\right] \quad \text{(Forward fault)} \qquad \text{Equation 25}$$

For a reverse fault, such as Switch S_F open and Switch S_R closed in Figure 18(b), the relay current is:

$$\vec{I}_0 = \vec{V}_0\left(\frac{1}{R_{0L}} + j\omega C_{0L}\right) \quad \text{(Reverse fault)} \qquad \text{Equation 26}$$

In ungrounded systems ($R_N = L_N \rightarrow \infty$), Equation 26 does not change. For ungrounded systems Equation 25 takes the form:

$$\vec{I}_0 = -\vec{V}_0\left(\frac{1}{R_{0S}} + j\omega C_{0S}\right) \quad \text{(Forward fault)} \qquad \text{Equation 27}$$

In compensated networks the direction of the quadrature component of I_0 may change for forward faults depending on the system tuning conditions (see Equation 25). This direction depends on the values of the equivalent zero-sequence capacitance of the unfaulted lines, C_{0S}, and the zero-sequence parallel-equivalent inductance of the Petersen coil, $3L_N$. Figure 20 shows the phasor diagram for ground faults in compensated networks. For reverse faults I_0 exhibits the same behavior as in ungrounded systems. For forward faults the angular position of I_0 with respect to V_0 may vary widely. The quadrature component of I_0 is negative, as in ungrounded systems in an undercompensated (undertuned) network, and positive in an overcompensated network. On the other hand, the sign of the in-phase, active, component of I_0 is always positive for reverse faults and negative for forward faults. We may use a wattmetric directional relay having the following output quantity (* = complex conjugate):

$$W = \mathrm{Re}\left[\vec{V}_0 \bullet \vec{I}_0{}^*\right] = V_0 I_0 \cos\varphi_0 \qquad \text{Equation 28}$$

We may compare W with positive and negative thresholds ($+\varepsilon$ and $-\varepsilon$). Then $W < -\varepsilon$ indicates a forward fault and $W > \varepsilon$ indicates a reverse fault. The wattmetric relay operating characteristic is also represented in Figure 20.

Figure 21 depicts a simplified logic diagram for a wattmetric element. The active component of I_0 is very low during ground faults, so the relay should be very sensitive (ε should be very small). To avoid relay misoperations during normal system conditions, add a starting function responding to the magnitude of V_0. Then wattmetric relay sensitivity is determined by the V_0 element sensitivity. The threshold V_0 value should be greater than the value of V_0 for normal system unbalances. A typical setting is 20 percent of the nominal system voltage.

The wattmetric method has been in use for many years in compensated systems. It is simple, secure, and dependable for low-resistance ground faults. However, the requirement of V_0 detection limits the sensitivity of the wattmetric method for high-resistance faults. Another drawback is that the method is very sensitive to CT accuracy problems. In the typical residual connection of the relay to three CTs, CT angle errors may produce a change in the sign of the element output, W. Careful calibration of the CTs is a possible solution, but flux-summation CTs are strongly recommended for wattmetric relays.

Some utilities use zero-sequence voltage relays to detect ground faults in compensated systems and automatically connect a resistor in parallel with the Petersen coil or to an auxiliary winding of the coil. For high-resistance faults, connecting the resistor reduces the zero-sequence voltage without necessarily increasing the zero-sequence fault current; the output of the wattmetric element actually decreases. The other limitation of this method is reduced sensitivity resulting from the use of the zero-sequence voltage for fault detection.

We may apply the wattmetric method for ground fault detection in all types of distribution systems having low ground-fault-current values. This includes isolated-neutral, high-impedance-grounded and compensated systems. However, for isolated neutral systems the varmetric method provides higher sensitivity than the wattmetric method, because the quadrature component of the zero-sequence current is always greater than the in-phase component for ground faults in these systems.

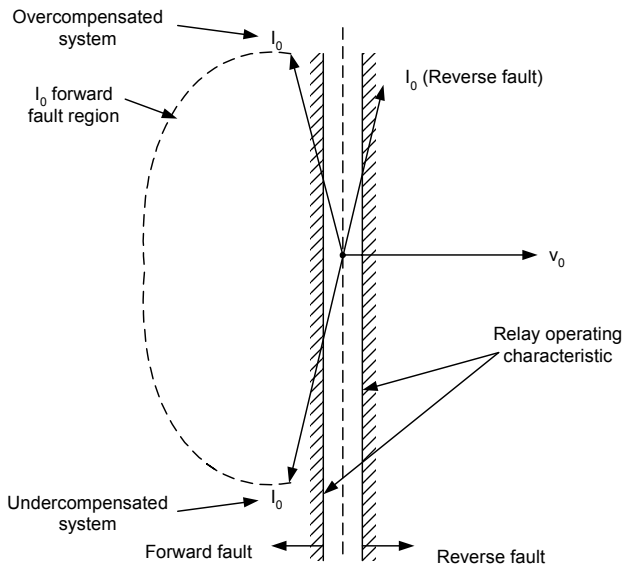

Figure 20 Typical Phasor Diagram for Ground Faults and Wattmetric Relay (32W) Operating Characteristics in a Compensated Network

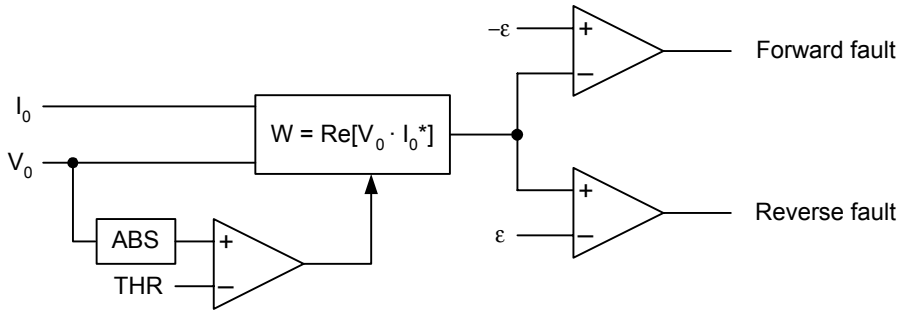

Figure 21 Simplified Logic Diagram of a Wattmetric Relay Element (32W)

NEW FAULT DETECTION METHODS FOR COMPENSATED DISTRIBUTION NETWORKS

Fundamental-frequency components of current and voltage provide the most reliable and significant information for detecting high-resistance faults in compensated distribution networks. The harmonic content of ground-fault current is small and variable, especially for high-resistance faults.

The transient components of current and voltage are severely damped for high-resistance faults. Methods that need some type of control on the Petersen coil or current injection provide high sensitivity, but require costly equipment.

All known fundamental-frequency methods that provide high sensitivity require information on all feeders and/or some sort of control on the Petersen coil or current injection. For example, the admittance method requires information from all feeders. The admittance method also needs control on the Petersen coil or current injection. The wattmetric method is a good solution for low-resistance faults, but has sensitivity limitations in detecting high-resistance faults.

We may provide high-resistance coverage by measuring the zero-sequence conductance or the zero-sequence resistance in the protected feeder. The new methods we introduce in this paper use only information from the feeder and do not require control on the Petersen coil or current injection. The methods are suitable for stand-alone, high-sensitivity devices that can be located at any point of a distribution network. A typical application is in the control unit of an automatic recloser.

Conductance Method

We use the distribution network depicted in Figure 18(a) to outline the conductance method. First, we disregard the system unbalance. Figure 18(b) shows the zero-sequence network for the balanced system. Equations 25 and 26 describe the zero-sequence relay current, I_0, for forward and reverse faults. We may then also use Equations 25 and 26 to calculate the apparent zero-sequence admittance, Y_0, measured by the relay for forward and reverse faults:

$$\vec{Y}_0 = \frac{\vec{I}_0}{\vec{V}_0} = -\left[\left(\frac{1}{R_{0S}} + \frac{1}{3R_N}\right) + j\left(\omega C_{0S} - \frac{1}{3\omega L_N}\right)\right] \quad \text{(Forward fault)} \qquad \text{Equation 29}$$

$$\vec{Y}_0 = \frac{\vec{I}_0}{\vec{V}_0} = \frac{1}{R_{0L}} + j\omega C_{0L} \quad \text{(Reverse fault)} \qquad \text{Equation 30}$$

Taking the real part from Equations 29 and 30, we can determine the conductance, G_0, measured by the relay for both faults:

$$G_0 = \mathrm{Re}\left[\frac{\vec{I}_0}{\vec{V}_0}\right] = -\left(\frac{1}{R_{0S}} + \frac{1}{3R_N}\right) = -\left(G_{0S} + G_{0N}\right) \quad \text{(Forward fault)} \qquad \text{Equation 31}$$

$$G_0 = \mathrm{Re}\left[\frac{\vec{I}_0}{\vec{V}_0}\right] = \frac{1}{R_{0L}} = G_{0L} \quad \text{(Reverse fault)} \qquad \text{Equation 32}$$

where $G_{0L}=1/R_{0L}$ is the zero-sequence leakage conductance of the protected feeder, $G_{0S}=1/R_{0S}$ is the equivalent zero-sequence leakage resistance of the remaining feeders, and $G_{0N}=1/3R_N$ is the zero-sequence conductance corresponding to the parallel equivalent of the Petersen coil.

We may use a conductance element responding to the real part of the I_0/V_0 ratio to detect ground faults. The element compares the measured conductance, G_0, with positive, ε, and negative, –ε, thresholds. Then $G_0 < -\varepsilon$ indicates a forward fault, and $G_0 > \varepsilon$ indicates a reverse fault. For forward faults (see Equation 31) the conductance element measures the equivalent conductance behind the relay. This includes the conductance of the remaining feeders and that of the parallel equivalent of the Petersen coil. For reverse faults (see Equation 32) the conductance element measures the conductance of the protected feeder.

The conductance method is inherently directional. It responds to the sign of the real part of the measured admittance. This is an advantage compared to the admittance method, which responds to the magnitude of the admittance and does not use valuable phase information.

The conductance method responds to the current/voltage ratio. Its output is relatively independent of the magnitudes of the zero-sequence current and voltage. This is an advantage compared to the wattmetric method, which fails to detect high-resistance faults caused by low values of both V_0 and I_0. Recall that the wattmetric element is a product-type element and the conductance element is a ratio-type element.

Incremental Conductance Method

The traditional conductance method described above works well in balanced systems and for low CT errors, such as using flux-summation CTs, for example. System and CT unbalances introduce errors in the measured conductance and thereby limit sensitivity. A solution to this problem is the incremental conductance method. We use the incremental zero-sequence current, ΔI_0 (Equation 24), and voltage, ΔV_0 (Equation 23), to calculate an incremental zero-sequence conductance, ΔG_0:

$$\Delta G_0 = \mathrm{Re}\left[\frac{\Delta \vec{I}_0}{\Delta \vec{V}_0}\right] \qquad \text{Equation 33}$$

Figure 19(b) shows the zero-sequence network of the Figure 18(a) system with incremental quantities. Note that this circuit is equal to that of Figure 18(b) for a balanced system. Then, the measured values of ΔG_0 coincide with those given for G_0 by Equations 31 and 32:

$$\Delta G_0 = -\left(\frac{1}{R_{0S}} + \frac{1}{3R_N}\right) = -\left(G_{0S} + G_{0N}\right) \qquad \text{(Forward fault)} \qquad \text{Equation 34}$$

$$\Delta G_0 = \frac{1}{R_{0L}} = G_{0L} \qquad \text{(Reverse fault)} \qquad \text{Equation 35}$$

The incremental conductance element (32C) compares the measured incremental conductance, the real part of the incremental current/incremental voltage ratio, with positive and negative thresholds to discriminate forward faults from reverse faults. It is a directional, ratio-type method that is not affected by system unbalance and that can be used with conventional CTs. Figure 22 depicts the measured incremental conductances for forward and reverse faults and the incremental conductance relay operating characteristic (two parallel straight lines).

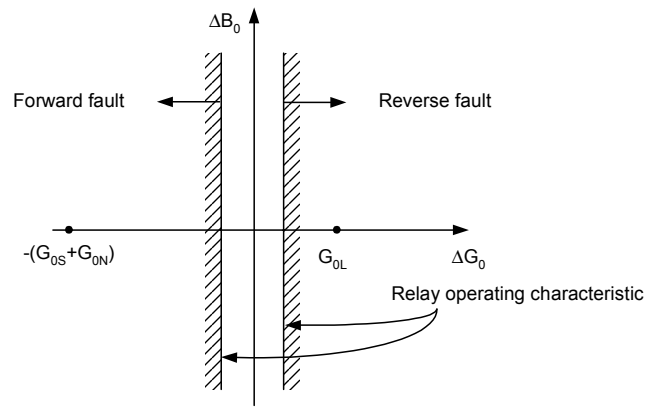

Figure 22 Incremental Conductance Element (32C) Operating Characteristic

Figure 23 depicts the simplified logic diagram for an incremental conductance element. It retains the advantages of the incremental conductance methods and does not require incremental zero-sequence voltage and current as input information.

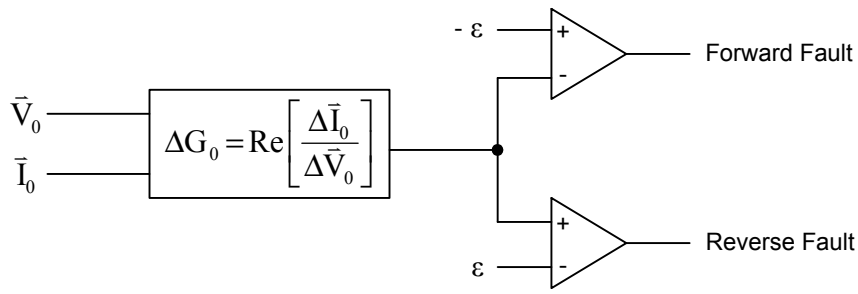

Figure 23 Simplified Logic Diagram of an Incremental Conductance Element (32C)

COMPENSATED SYSTEM DIRECTIONAL ELEMENT PERFORMANCE

To demonstrate the performance of this new ground directional element, we modeled a distribution power system using EMTP (Electromagnetic Transients Program) and played the results through a relay simulation program and a test system connected to the relay. The simulated system includes a 138 kV three-phase balanced source, a delta-wye 138-13 kV step-down transformer, a Petersen coil, and three feeders. All three overhead line feeders have the same tower structure (see Figure 24) but different line lengths as shown in Figure 25.

At 100 percent tuning, the total zero-sequence capacitive current from all feeders equals the inductive current provided by the Petersen coil in the normal unfaulted system condition. The Petersen coil has an inductance of 5.15 Henries and an X/R = 30.

Because of the high zero-sequence impedance presented by the Petersen coil resonant system, the fault voltage and current profiles are almost identical for both close-in and remote ground faults.

Each of three feeders has a leakage conductance of five micro-Siemens primary. The equivalent shunt conductance of the Petersen coil is 5.72 micro-Siemens primary. From our previous analysis, for a ground fault anywhere on this distribution system, the relay at the faulted feeder calculates an incremental conductance that equals the negative sum of the conductances of all remaining feeders plus that of the Petersen coil. This negative sum of conductance is

-15.72 micro-Siemens primary. Relays that see the fault as a reverse fault calculate an incremental conductance that equals its own feeder leakage conductance of five micro-Siemens primary.

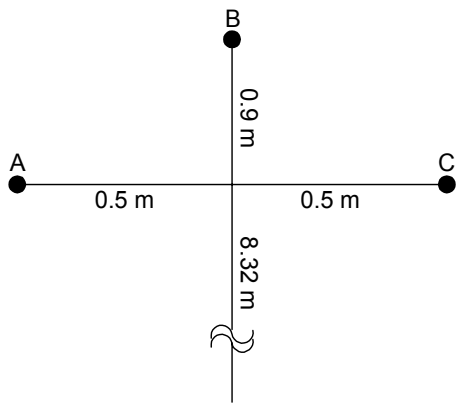

Figure 24 Tower Configuration of Simulated System

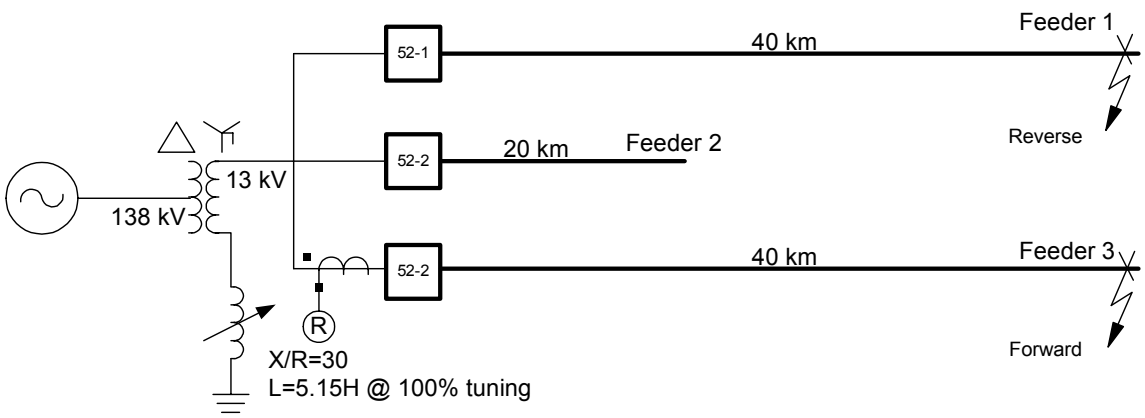

Figure 25 Simulated Power System Single-Line

The first example simulates an A-phase-to-ground fault on Feeder 3. The system is initially at the 100 percent tuning condition. The fault resistance is 80 kΩ primary. The fault is a self-clearing fault that lasts one second. Figure 26 shows the zero-sequence voltage, $3V_0$, and current, IR, of Feeder 3. The A-phase-to-ground fault occurs at cycle 60 and self-extinguishes at cycle 120. Notice that in Figure 26, the standing zero-sequence voltage, $3V_0$, is 26.1 V secondary. Recall that the traditional wattmetric directional element requires that $|3V_0|$ exceeds 0.2 V_{nom}, or 13.9 V in this application, to be enabled. This standing voltage is already 62 percent of the enabling threshold, 59RES. Note, too, that the $|3V_0|$ during the A-phase fault is even lower than the system standing zero-sequence voltage. In this situation, the traditional wattmetric method is not sensitive enough to detect this 80 kΩ fault.

Figure 27 shows the wattmetric and conductance directional calculations and the forward (FWD) and reverse (REV) threshold settings for a relay installed on Feeder 3. Note that the incremental conductance directional element correctly detects the high-impedance fault: In other words, it produced a negative result that overcomes the forward fault threshold for the fault. Also, note that the incremental conductance value during the fault is about 157 micro-Siemens secondary, a correct value given a PTR to CTR ratio of ten. The wattmetric element calculated a zero-sequence active power value that indicated a trend for a forward fault (a negative value).

However, this power value is far short from overcoming the forward fault detection threshold. Remember that the zero-sequence voltage magnitude during the fault is even lower than that of the system standing zero-sequence voltage, therefore the wattmetric element is not enabled for this fault.

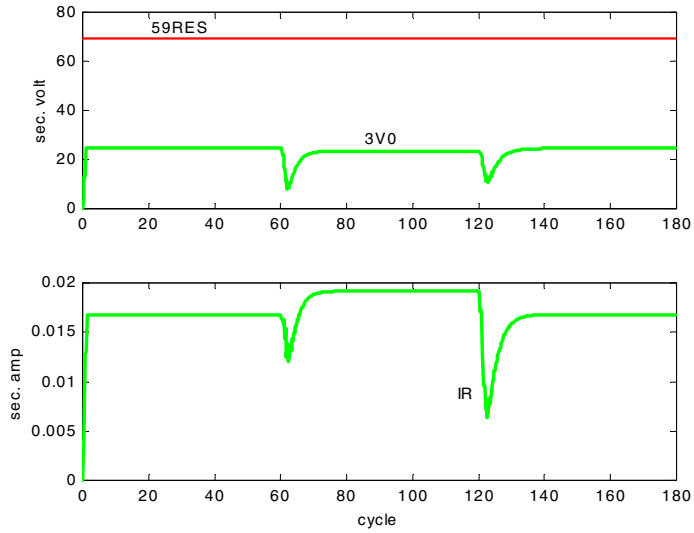

Figure 26 Zero-Sequence V and I Plots for an 80 kΩ AG Fault on Feeder 3

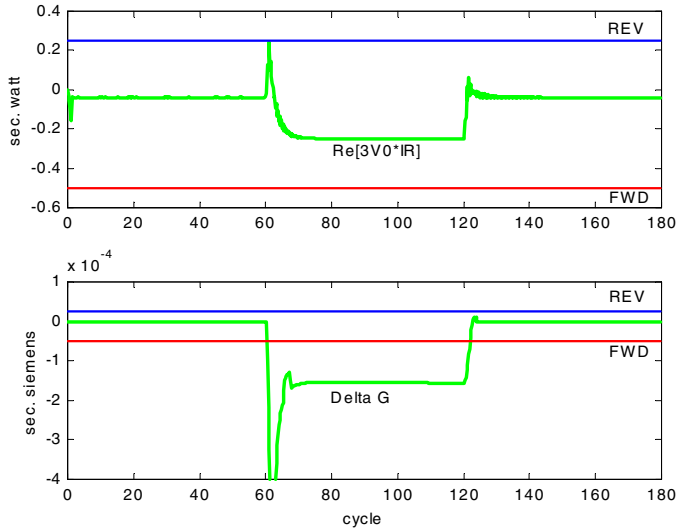

Figure 27 Feeder 3 Wattmetric and Conductance Element Calculations for Case 1

The second case simulates a B-phase-to-ground fault on Feeder 1, which is a reverse fault for the relay at Feeder 3. The B-phase-to-ground fault occurs at cycle 60 and self-extinguishes at cycle 120. The fault resistance is 30 kΩ primary. The system is 20 percent over-compensated initially. Figure 28 shows the zero-sequence voltage and current of Feeder 3. From the figure, notice that the standing zero-sequence voltage, $3V_0$, is 15.3 V secondary, a much lower value than that of Case 1 with a 100 percent tuned system. The zero-sequence voltage magnitude, $|3V_0|$, during the

fault is much higher than the standing voltage, but it is still lower than the enable threshold of the wattmetric element.

Figure 29 shows the wattmetric and conductance directional calculations and thresholds for the relay installed on Feeder 3. Note that the incremental conductance directional element calculates a correct positive conductance result, about 50 micro-Siemens secondary, which is above its reverse fault detection threshold. The relay therefore successfully detected the high impedance reverse fault. The wattmetric element is not enabled by the zero-sequence overvoltage element; its zero-sequence power value also fell below the reverse fault threshold, and therefore the element failed to detect the reverse fault.

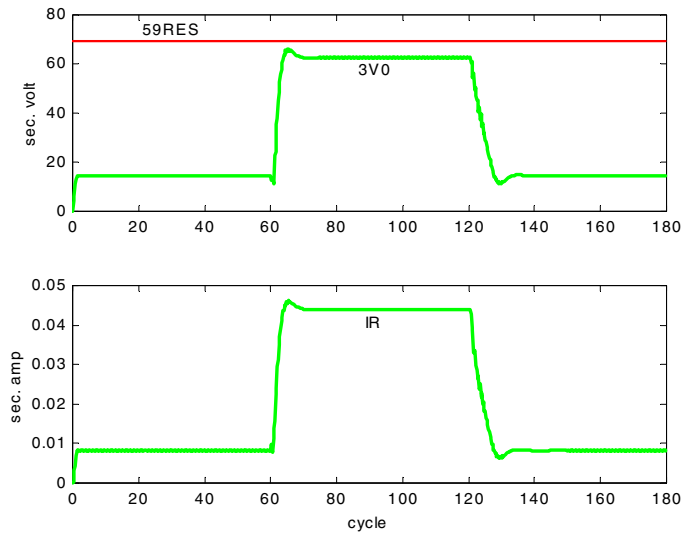

Figure 28 Zero-Sequence V and I Plots for a 30 kΩ BG Fault on Feeder 1

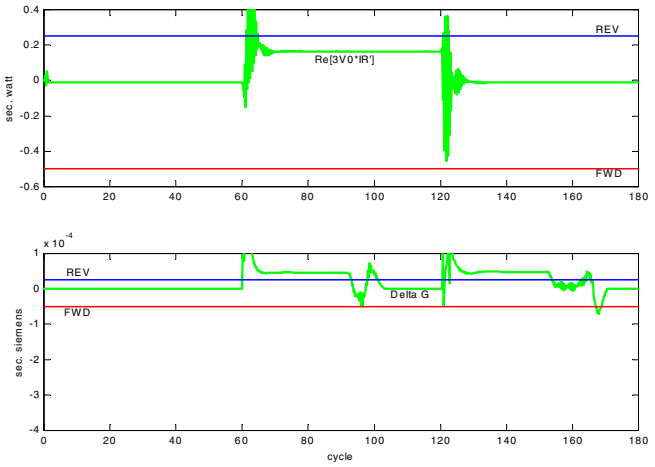

Figure 29 Feeder 3 Wattmetric and Conductance Element Calculations for Case 2

IMPROVED BROKEN DELTA VOLTAGE TRANSFORMER CONNECTION

Modern relays accept many different configurations for voltage transformers (VTs): three-phase four-wire, open-delta, and broken delta. The latter VT connection is suitable for ground directional element applications and is very common in most of the existing ungrounded and resonant-grounded systems. However, this standard broken-delta connection can present a unique set of problems outside of ferroresonance. Figure 30 shows a classical broken-delta VT connection.

While the broken-delta VT connection does provide zero-sequence voltage for measurement during ground faults, the nominal output voltage for a bolted ground fault on the ungrounded or Petersen system can be over 360 V_{AC} if the nominal voltage for each phase transformer of the broken delta is 120 V_{LN}. Such a high voltage is higher than most relay input ratings. Because the ideal prefault zero-sequence voltage magnitude is zero, it is difficult to detect a blown VT fuse. Because many ground directional elements require a minimum zero-sequence voltage, a blown VT fuse could defeat ground protection.

Many installations require maintaining the broken-delta VT connection for existing control devices. Thus, the challenge is to extract three-phase four-wire voltage signals from an existing broken-delta connection. It is also very desirable to have a relaying system applicable to a standard three-phase, four-wire VT application. Figure 31 shows a simple, patent-pending solution. This solution requires connecting the relay input transformers as shown. With this connection, the relay can then measure each phase voltage and calculate the necessary $3V_0$ for the zero-sequence directional element described earlier.

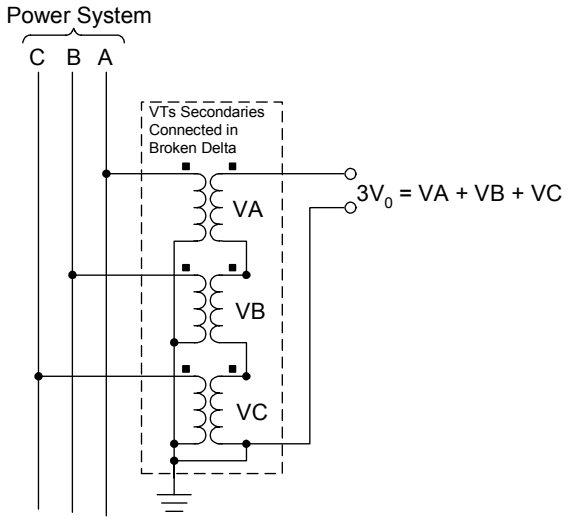

Figure 30 Traditional Broken Delta VT Connection Diagram

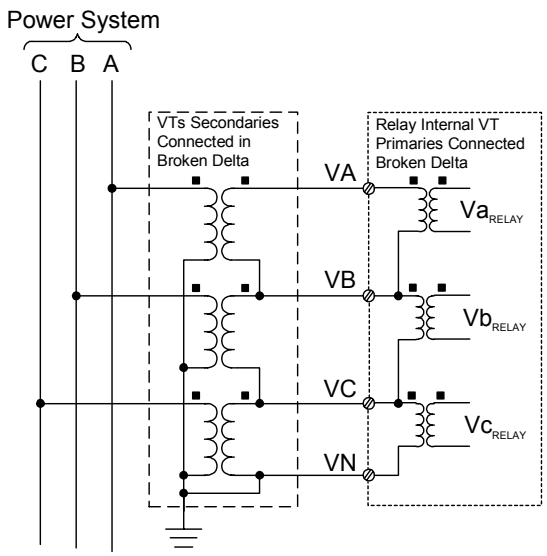

Figure 31 Single-Line Diagram and New Broken-Delta VT Connection Diagram

The benefits of this new VT connection approach are:

- No relay input transformer has to be rated for 360 V_{AC}.
- The relay system can now check for blown potential fuses. In a relay using the traditional broken-delta connection on a system with little or no unbalance, the $3V_0$ measurable before and after a blown secondary fuse is the same, zero volts.
- The relay can measure each individual phase voltage and calculate the necessary sequence components. This allows the relay to use the same VTs for phase and ground directional control elements.
- It does not require disturbing existing wiring for devices using the broken-delta voltage output. Simply add wires from the B- and C-phase polarity marks of the VT secondaries to the respective inputs on the relay.
- It allows dual phase directionality from differing VTs: Main 1 could use this new connection from the broken-delta system while Main 2 could use the existing open-delta VTs for polarizing.

SUMMARY OF GROUND FAULT PROTECTION METHODS

Table 2 summarizes available fundamental-frequency methods for stand-alone relays in distribution systems. For solidly- and low-impedance grounded systems we recommend using the best choice directional element. This element automatically selects the optimal directional element, 32I, 32Q, or 32V, for each particular system configuration and ground fault condition. For isolated neutral systems we recommend using the zero-sequence impedance element, 32U. Finally, for high-resistance-grounded systems, high-reactance grounded systems and compensated systems we recommend using a combination of the wattmetric, 32W, and the incremental conductance, 32C, elements. The 32W element provides reliable detection of low-resistance faults, up to about 10 kΩ. The 32C element adds the sensitivity required to detect very high-resistance faults.

Table 2 Summary of Ground Fault Protection Methods for Stand-Alone Relays in Medium-Voltage Distribution Systems

Grounding Method	Available Fault Detection Method	Recommended Method
Solidly and Low-Impedance Grounding	32I 32Q 32V	Best Choice Directional
Isolated Neutral	32U 32VAR 32W 32C	32U
High-Resistance Grounding	32W 32C 32VAR	Combination of 32W and 32C
High- Reactance Grounding	32W 32C 32VAR	Combination of 32W and 32C
Resonant Grounding	32W 32C	Combination of 32W and 32C

Legend:

32I: Current-Polarized Directional Element
32Q: Negative-Sequence Voltage-Polarized Directional Element
32V: Zero-Sequence Voltage-Polarized Directional Element
32U: Zero-Sequence Impedance Element for Ungrounded Systems
32VAR: Varmetric Element
32W: Wattmetric Element
32C: Incremental Conductance Element

Table 3 depicts the main sensitivity limiting factors of the ground directional elements. Line asymmetry generates negative- and zero-sequence currents for three-phase faults [14]. We need to use a_2 and/or a_0 settings to avoid misoperation of 32I, 32Q, 32V and 32U elements. CT and VT magnitude and angle errors produce standing negative and zero-sequence voltages and currents [15]. The negative- and zero-sequence quantities produced by ground faults should overcome these standing voltages and currents. Total system unbalance is the main sensitivity limiting factor in wattmetric, 32W, and varmetric elements, 32VAR. The starting function responding to V_0 in these elements needs to be set above the standing V_0 value because of system unbalance. The 32C element is highly sensitive. The inherent sensitivity of a particular relay design determines the 32C element sensitivity.

Table 3 also shows the basic CT and VT requirements for ground directional elements in distribution systems. We strongly recommend minimizing phase CT saturation problems to avoid false negative- and zero-sequence currents for three-phase faults [15] in the application of 32I, 32Q, and 32V elements. We also recommend using flux-summing CTs to provide zero-sequence current information to 32U, 32W, and 32C elements. We recommend using Class 2 VTs or better in all ground directional element applications [15].

Table 3 Factors Affecting Sensitivity of Ground Directional Elements for Distribution Systems

Element	Sensitivity Limiting Factors	CT Requirements	VT Requirements
32I 32Q 32V	-Line asymmetry -CT and VT inaccuracies -CT Saturation (32V only)	-Select phase CTs to minimize saturation	-Class 2 VTs or better recommended
32U	-Line asymmetry -CT and VT inaccuracies	-Flux-summing CTs recommended	-Class 2 VTs or better recommended
32W 32VAR	-Total system unbalance	-Flux-summing CTs recommended	-Class 2 VTs or better recommended
32C	-Relay sensitivity limits	-Flux-summing CTs recommended	-Class 2 VTs or better recommended

CONCLUSIONS

1. Ground faults in solidly- and low-impedance-grounded systems may produce high current levels that require line tripping. Use directional elements to provide ground-fault protection in these systems. In multigrounded four-wire distribution systems, the relay measures the ground fault current combined with the unbalance current. As a result, detecting high-resistance faults in these systems is very difficult.

2. Selecting a fixed ground directional element for all system conditions may sacrifice protection reliability and sensitivity in solidly and low-impedance grounded systems. The ground directional relay described in this paper includes two zero-sequence elements and a negative-sequence element. The relay selects automatically the best directional element to use for each particular fault and system condition (patented).

3. Ungrounded systems are connected to ground through the line-to-ground capacitances. Single line-to-ground faults shift the system neutral but leave the phase-to-phase voltage triangle intact. Self-extinction of ground faults in overhead-ungrounded lines is only possible for low values of ground fault current.

4. Zero-sequence or three-phase voltage relays can detect ground faults in ungrounded systems. However, this method is not selective. A sensitive, directional ground varmetric element is the classic solution to ground fault detection in ungrounded systems.

5. A new ground directional element for ungrounded systems (patent pending) measures the zero-sequence reactance and compares its value with two settable thresholds. For a forward ground fault, the element measures the zero-sequence capacitive reactance of the equivalent system behind the relay. For reverse faults, the new element measures the series combination of the protected line zero-sequence series impedance and the line capacitive reactance. The new directional element includes a security supervision logic that requires the ratio of residual current to positive-sequence current to exceed a minimum scalar threshold value. The benefit

of this supervision as compared to the traditional $3V_0$ security supervision is that the minimum sensitivity of each feeder relay is not dependent upon the total system unbalance.

6. Compensated systems are grounded through a variable impedance reactor, which compensates the system phase-to-ground capacitance. The system remains operational during ground faults. Resonant grounding provides self-extinction of the arc in overhead lines for about 80 percent of temporary ground faults. Then, ground faults that clear without breaker tripping represent more than 50 percent of all faults in overhead lines.

7. The wattmetric method is the most widely used solution to ground fault detection in compensated systems. The relay element responds to the in-phase (real) component of the zero-sequence current with respect to the zero-sequence voltage. The requirement of V_0 detection limits the sensitivity of the wattmetric method for high-resistance faults. All known fundamental-frequency methods that provide high sensitivity, for example, the admittance method, require information on all feeders and/or some sort of control on the Petersen coil or current injection.

8. We may provide high-resistance coverage by measuring the zero-sequence conductance in the protected feeder. This method works well in balanced systems and for low CT errors, such as using flux-summation CTs. An enhancement to this method is to calculate the incremental conductance as the real part of the ratio of the incremental zero-sequence current to the incremental zero-sequence voltage. The incremental conductance method is inherently directional, exhibits high fault resistance coverage, and is applicable in a stand-alone feeder relay.

9. We conducted extensive digital simulation testing of a new incremental conductance ground directional element for compensated systems using EMTP. The relay element performed well even for high-resistance faults. The new element detected faults with resistance values over 60 kΩ.

REFERENCES

[1] M. Pühringer, *Resonant Grounding as Approach to System Neutral Grounding*, Haefely Trench, February 1998.

[2] AIEE Committee Report, "Sensitive Ground Protection," AIEE Transactions, Vol. 69, 1950, pp. 473–476.

[3] E. T. B. Gross, "Sensitive Fault Protection for Transmission Lines and Distribution Feeders," AIEE Transactions, Vol. 60, Nov. 1941, pp. 968–972.

[4] G. Druml, "Detecting High-Ohmic Earth Faults in Compensated Networks," Proceedings of the International Symposium NMT, 1995.

[5] Haefely Trench, EPSY-Earthfault Protection System: Summary of the Results of Earthfault Field Tests.

[6] Ya. S. Guelfand, Protection of Distribution Networks, Moscow: Energoatomizdat, 1987 (Russian).

[7] A. M. Fedoseev, Protective Relaying of Electrical Systems, Moscow: Energia, 1976 (Russian).

[8] D. Griffel, Y. Harmand, and J. Bergeal, "New Neutral Earthing Technologies on MV Networks," Revue Generale D'Electricite, No. 11, December 1994, pp. 35–44 (French).

[9] L. F. Hunt and J. H. Vivian, "Sensitive Ground Protection for Radial Distribution Feeders," AIEE Transactions, Vol. 59, February 1940, pp. 84–90.

[10] J. L. Blackburn, Protective Relaying: Principles and Applications, Second Edition, New York: Marcel Dekker, Inc., 1998.

[11] B. Bridger, "High-resistance grounding," IEEE Transactions on Industry Applications, Vol. IA-19, No. 1, January/February 1983, pp. 15–21.

[12] K. M. Winter, "Swedish Distribution Networks—a New Method for Earthfault Protection in Cable and Overhead Systems," Proceedings of the Fifth International Conference on Developments in Power System Protection—DPSP '93, United Kingdom, 1993, IEE Conference Publication No. 368, pp. 268–270.

[13] A. Haman, "Petersen Coils as Applied to 41.6 kV Systems," Proceedings of the 34th Annual Minnesota Power Systems Conference, St. Paul, Minnesota, October 6–8, 1998.

[14] J. Roberts and A. Guzman, "Directional Element Design and Evaluation," Proceedings of the 21st Annual Western Protective Relay Conference, Spokane, WA, October 1994.

[15] J. Roberts, E.O. Schweitzer III, R. Arora, and E. Poggi, "Limits to the Sensitivity of Ground Directional and Distance Protection," Proceedings of the 22nd Annual Western Protective Relay Conference, Spokane, WA, October 1995.

[16] L. Blackburn, "Negative Sequence Relaying for Mutually Coupled Lines," Proceedings of the 1972 Conference for Protective Relay Engineers, Texas A&M University, College Station, TX, April 1972.

[17] E.O. Schweitzer III and J. Roberts, "Distance Relay Element Design," Proceedings of the 19th Annual Western Protective Relay Conference, Spokane, WA, October 1992.

[18] A. Guzman, J. Roberts, and D. Hou, "New Ground Directional Elements Operate Reliably for Changing System Conditions," Proceedings of the 23rd Annual Western Protective Relay Conference, Spokane, WA, October 15–17, 1996.

[19] V. Leitloff, L. Pierrat, and R. Feuillet, "Study of the Neutral-to-Ground Voltage in a Compensated Power System," European Transactions on Electrical Power Engineering, Vol. 4, No. 2, March/April 1994, pp. 145–153.

[20] V. Leitloff, R. Feuillet, and L. Pierrat, "Determination of the Phase-to-Ground Admittance in a Compensated MV Power Distribution System," Proceedings of the 28th Universities Power Engineering Conference—UPEC '93, Vol. 1, Stafford, United Kingdom, September 21–23, 1993, pp. 73–76.

[21] G. Benmouyal and J. Roberts, "Superimposed Quantities: Their True Nature and Their Application in Relays," Proceedings of the 26th Annual Western Protective Relay Conference, Spokane, WA, October 26–28, 1999.

BIOGRAPHIES

Jeff Roberts received his BSEE from Washington State University in 1985. He worked for Pacific Gas and Electric as a System Protection Engineer. In 1988, he joined Schweitzer Engineering Laboratories, Inc. as the first Application Engineer. Later he became Application Engineering Manager. He now serves as the Research Engineering Manager. He has written many papers in the areas of distance element design, sensitivity of distance and directional elements, line differential and directional element design, protection scheme design and analysis of event report data. Mr. Roberts holds over twenty patents granted or pending. He is also a senior member of IEEE.

Hector J. Altuve received his BSEE from Central University of Las Villas (UCLV), Cuba, in 1969 and his PhD from Kiev Polytechnic Institute, USSR, in 1981. He served as a professor in the School of Electrical Engineering at UCLV from 1969 to 1993. Since 1993 he has been a professor in the PhD program of the Mechanical and Electrical Engineering School at Autonomous University of Nuevo Leon, in Monterrey, Mexico. He is a member of the Mexican National Research System, a senior member of IEEE, and a PES Distinguished Lecturer. He has authored and coauthored many technical papers. He was the 1999–2000 Schweitzer Visiting Professor at Washington State University.

Daqing Hou received BS and MS degrees in Electrical Engineering at the Northeast University, China, 1981 and 1984, respectively. He received his Ph.D. in Electrical and Computer Engineering at Washington State University in 1991. Since 1990, he has been with Schweitzer Engineering Laboratories, Inc., Pullman, Washington, USA, where he is currently a Development Engineering Manager. His work includes system modeling, simulation and signal processing for power system digital protective relays. His research interests include multivariable linear systems, system identification, and signal processing. He holds several patents and multiple patents pending. He has authored or co-authored several technical papers, and is a senior member of IEEE.

Copyright © SEL 2001
(All rights reserved)
Printed in USA
20011012