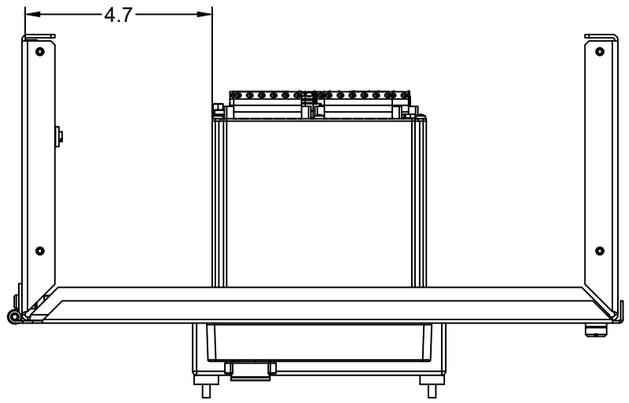

TOP VIEW
(ALUMINUM SWING PANEL AND CHASSIS)

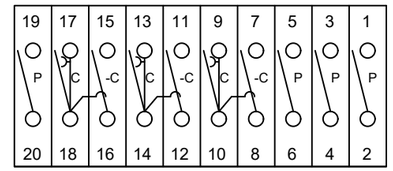

TEST SWITCH CONFIGURATION
(REAR VIEW)

Form 5 Wiring			
TERM	Label	TERM	Label
735-Z01	Z01	TS-07	7-IA*
735-Z02	Z02	TS-09	9-IA
735-Z05	Z05	TS-15	15-IC*
735-Z06	Z06	TS-17	17-IC
735-Z07	Z07	TS-01	1-VA
735-Z08	Z08	735-Z10	Z10
735-Z08	Z08	TS-03	3-VB
735-Z09	Z09	TS-05	5-VC
735-Z10	Z10	TS-19	19-VN
735-GND	735-GND	GND	GND

Form 9 Wiring			
TERM	Label	TERM	Label
735-Z01	Z01	TS-07	7-IA*
735-Z02	Z02	TS-09	9-IA
735-Z03	Z03	TS-11	11-IB*
735-Z04	Z04	TS-13	13-IB
735-Z05	Z05	TS-15	15-IC*
735-Z06	Z06	TS-17	17-IC
735-Z07	Z07	TS-01	1-VA
735-Z08	Z08	TS-03	3-VB
735-Z09	Z09	TS-05	5-VC
735-Z10	Z10	TS-19	19-VN
735-GND	735-GND	GND	GND

Form 36 Wiring			
TERM	Label	TERM	Label
735-Z01	Z01	TS-07	7-IA*
735-Z02	Z02	TS-09	9-IA
735-Z03	Z03	TS-11	11-IB*
735-Z04	Z04	TS-13	13-IB
735-Z05	Z05	TS-15	15-IC*
735-Z06	Z06	TS-17	17-IC
735-Z07	Z07	TS-01	1-VA
735-Z09	Z09	TS-05	5-VC
735-Z10	Z10	735-Z08	Z08
735-Z10	Z10	TS-19	19-VN
735-GND	735-GND	GND	GND

NOTES:

1. FOR MOUNTING INFORMATION, SEE DIMENSION DRAWING i9117.
2. ENCLOSURE DOES NOT INCLUDE PENETRATIONS FOR FIELD WIRING.

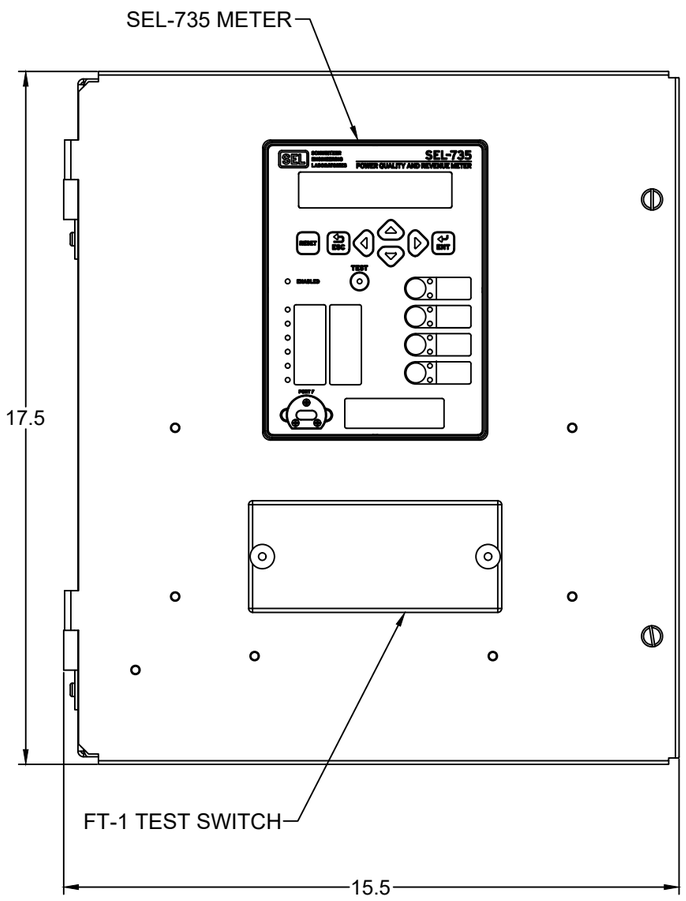

FRONT VIEW
(ALUMINUM SWING PANEL AND CHASSIS)

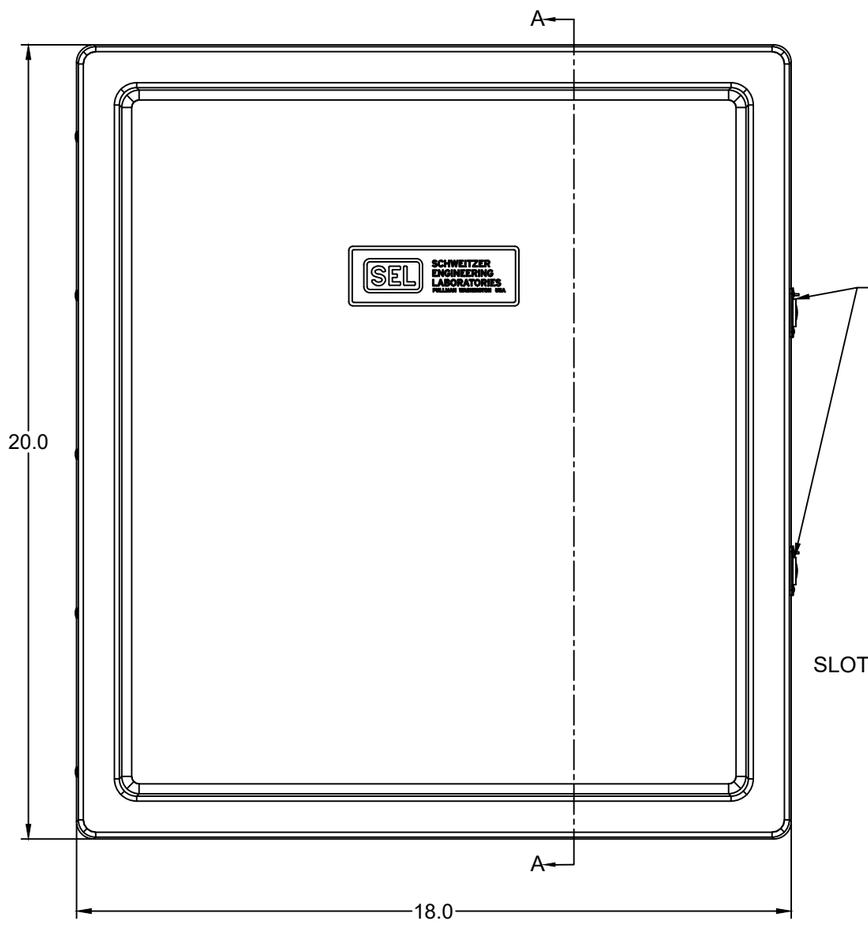

FRONT VIEW
(UL TYPE 4X FIBERGLASS ENCLOSURE)

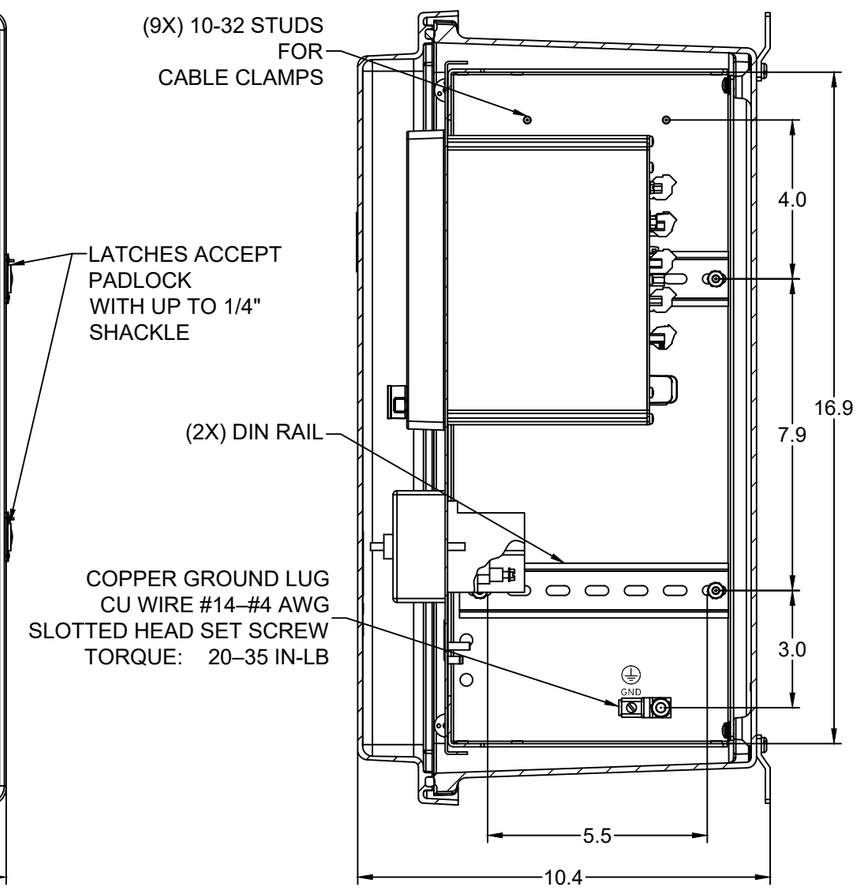

SECTION A-A

REV. NO.	DATE	APPROVAL	DESCRIPTION
A	7/15/13	D.HAMILTON	INITIAL DRAFT
B	1/16/15	C. CARVER	ADDED FORM 36 WIRING TABLE
C	10/31/16	D. FOGO	FIXED TOP VIEW
D	4/12/18	B. LAFERRIERE	ADDED GROUND WIRING

SCHWEITZER ENGINEERING LABORATORIES, INC.
2350 NE Hopkins Court, Pullman, WA 99163-5603 USA

This document and all information contained herein is proprietary to Schweitzer Engineering Laboratories, Inc. Any unauthorized use, distribution, or reproduction of this document (in whole or in part) or of any information contained herein is specifically prohibited. This legend must appear on any authorized reproduction (in whole or in part).
COPYRIGHT © SEL 2018

SEL-735 VERTICAL, FORM 5, 9, & 36 WIRING
0735[VB]B*0*****X**XX****2XX

LAYOUT DRAWING

SCALE	ENGINEER	DRAFTER	DATE	REV
NTS	A. JAYKUMAR	B. LAFERRIERE	4/12/18	D

DWG NO LDW7350002 SHT 1 OF 1