SEL-751 Feeder Protection Relay

Comprehensive Feeder Protection and Control With Arc-Flash Detection

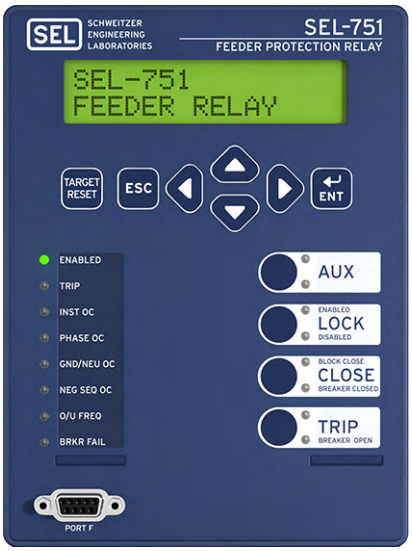

Two-Line Display Model
With Four Pushbuttons

Five-Inch, Color Touchscreen Display Model
With Eight Pushbuttons and Four I/O Modules

New Features

- Expand I/O flexibility with as many as four extended I/O modules, each with either 21 programmable inputs or 12 electromechanical outputs, to increase the number of available inputs and outputs for various applications.
- Detect abnormal sustained voltage conditions with the phase-to-phase overvoltage three-second rms (593SRMS) element based on the CEI 0-16 standard.
- Improve ground fault detection in resonant-grounded and ungrounded systems by using the zero-sequence PHI and intermittent ground fault elements.
- Improve network reliability by enabling High-availability Seamless Redundancy (HSR) to maintain uninterrupted communications.
- Strengthen interoperability with IEC 61850, Edition 2.1.
- Increase power quality visibility with THD measurement and harmonic metering.

Major Features and Benefits

The SEL-751 Feeder Protection Relay provides a comprehensive combination of protection, fault-locating, monitoring, control, and communication features in an industrial package.

- **Standard Protection Features.** Protect lines and equipment with an extensive range of protection elements, including:
  - Overcurrent elements
  - Over- and underfrequency elements
  - Second- and fifth-harmonic current blocking (inrush blocking)
  - Demand metering elements
  - Breaker failure protection
  - Phase discontinuity detection
  - Cold-load pickup
  - Incipient cable fault detection
  - Frequency component detection
  - Breaker failure protection
  - SELOGIC® control equations
  - Cable or line thermal elements that conform to the IEC 60255-149 standard
- **Additional Protection Features.** Use the SEL-751 with one of the voltage input options to protect lines and equipment with rate-of-change-of-frequency elements, fast rate-of-change-of-frequency elements, definite-time and inverse-time over- and undervoltage elements, and load-encroachment and directional power elements. Also take advantage of the vector shift elements to aid in islanding detection.
- **Optional Directional Control.** Use overcurrent elements with directional control to optimize radial and looped network protection for lines and equipment. Best Choice Ground Directional Element® logic optimizes directional element performance and eliminates the need for many directional settings.
- **Optional High-Impedance Fault Detection.** Use the high-impedance fault (HIF) detection element to detect small-current ground faults that typically result from downed conductors on ground surfaces, such as earth, reinforced concrete, or other poorly conductive materials. HIF event data are available in COMTRADE or Compressed ASCII format.
- **Optional Arc-Flash Protection.** Reduce or eliminate damage from arc-flash events with the optional four- or eight-channel fiber-optic arc-flash detector inputs and protection elements. Settable arc-flash phase and neutral overcurrent elements, combined with arc-flash light detection elements, provide secure, reliable, and fast arc-flash event protection.
- **Optional Broken Conductor Detection.** The broken conductor detection (BCD) element identifies high-impedance downed conductors when combined with the Arc Sense™ technology (AST) option on wye-connected systems. This detector operates on three-phase and single-conductor systems and can help reduce the possibility of a public hazard, including fire.
- **Optional Low-Energy Analog (LEA) Voltage Sensor Inputs, Rogowski Coil/LPCT Currents Inputs, and Conventional 200 mA Sensitive Neutral Input.** The LEA input range for voltages is as high as 8 Vac rms. Based on the nominal feeder current, the relay automatically sets the gain for the LEA current channel inputs, which allows for a wide range of primary currents.
- **Optional Synchronism Check and DC Station Battery Monitor.** Check single-phase voltage across a circuit breaker, measure dc voltage levels in the substation battery, or use as an additional ac voltage measurement with over- and undervoltage elements.
- **Operator Controls and Reclosing.** Trip and close the breaker easily with four or eight programmable front-panel pushbuttons, each with two tricolor LEDs. Implement remote and local control functions, and selectively reclose with synchronism and voltage checks.
- **Integrated Web Server.** View settings and metering and monitoring data, download event reports, and upgrade relay firmware with an intuitive password-protected web server.
- **Relay and Logic Settings Software.** Reduce engineering costs by using ACSELERATOR QuickSet® SEL-5030 Software for relay settings and logic programming and to simplify development of SELOGIC control equations.
- **Metering and Monitoring.** Use built-in metering functions to eliminate separately mounted metering devices. Analyze Sequential Events Recorder (SER) reports and oscillographic event reports for rapid commissioning, testing, and post-fault diagnostics. Unsolicited SER protocol allows station-wide collection of binary SER messages.
- **Optional Fault Location.** Reduce fault location and repair time with built-in, impedance-based fault location and faulted phase indication.

- **Wye or Delta Voltage Inputs.** Connect voltage inputs that are wye-connected, open-delta-connected, or single voltage.
- **Additional Standard Features.** Improve your feeder protection with these additional standard features in every SEL-751: Modbus RTU, Event Messenger support and MIRRORED BITS® communications, load profile and breaker wear monitoring, support for 12 external RTDs (SEL-2600), IRIG-B input, advanced SELOGIC, and IEEE C37.118-2005-compliant synchrophasor protocol to provide real-time measurement data.
- **Optional Communications Protocols.** Optional communications protocols include IEC 61850 Edition 2.1, Modbus TCP/IP, Simple Network Time Protocol (SNTP), IEEE 1588-2008 firmware-based PTP, IEEE 1588-2008 hardware-based PTP when in PRP mode, PRP, EtherNet/IP, DNP3 LAN/WAN, DNP3 serial, IEC 60870-5-103, HSR, and RSTP. With an Ethernet equipped relay, use the integrated web server to view settings and metering and monitoring data, download reports, and upgrade firmware.
- **Optional Communications Ports.** Elective communications ports include EIA-232 or EIA-485 multimode fiber-optic serial port and single or dual, copper or fiber-optic Ethernet ports.
- **Optional I/O Cards.** Digital and analog I/O options include 4 AI/4 AO, 4 DI/4 DO, 8 DI, 8 DO, 8 AI, 3 DI/4 DO/1 AO, 4 DI/3 DO, and 14 DI. An optional 10 internal RTD card is also available for the SEL-751. Conformal coating for chemically harsh and/or high-moisture environments is also available as an option.
- **Optional I/O Modules.** In addition to I/O cards, add as many as 4 I/O modules. Each module contains either 21 programmable inputs or 12 electromechanical outputs.
- **Supported Languages.** Choose English or Spanish for your serial ports, including the front-panel serial port. The standard relay front-panel overlay is in English; a Spanish overlay is available as an ordering option.

Model Comparison Guide: Exploring the SEL-751 Options

The SEL-751 protection features depend on the model selected. The models are configured with specific current/voltage input cards. The SEL-751 supports both conventional current and potential transformer inputs and low-energy analog sensor inputs. *Table 1* shows current (ACI) and voltage (AVI) card selections for the SEL-751 models.

Table 1 Current (ACI) and Voltage (AVI) Card Selection for SEL-751 Models

Model Description	Slot Z Card Option (MOT String Digit Numbers 14, 15)	Slot Z Inputs	Slot E Card Option (MOT String Digit Numbers 12, 13)	Slot E Inputs
Base SEL-751 AC Currents Only	4 ACI (A1, A2, A3, A5, A6, A7)	IA, IB, IC, IN	None (0X)	None
SEL-751 With AC Voltages (300 Vac)	4 ACI/3 AVI (81, 82, 83, 85, 86, 87)	IA, IB, IC, IN, VA, VB, VC	None (0X)	None
SEL-751 With LEA AC Voltages (8 Vac)	4 ACI/3 AVI (L1, L2, L3, L5, L6, L7)	IA, IB, IC, IN, VA, VB, VC	None (0X)	None
SEL-751 With AC Phase Voltages (300 Vac), Vsync (300 Vac), Vbat (300 V) Input, and 4 Arc-Flash Detection Inputs	4 ACI/3 AVI (81, 82, 83, 85, 86, 87)	IA, IB, IC, IN, VA, VB, VC	2 AVI/4 AFDI (70)	VS, VBAT, AF1, AF2, AF3, AF4
SEL-751 With LEA AC Phase Voltages (8 Vac), LEA Vsync (8 Vac), Vbat (300 V) Input, and 4 Arc-Flash Detection Inputs	4 ACI/3 AVI (L1, L2, L3, L5, L6, L7)	IA, IB, IC, IN, VA, VB, VC	2 AVI/4 AFDI (L0)	VS, VBAT, AF1, AF2, AF3, AF4
SEL-751 With LEA Voltage Sensor Inputs, Rogowski Coil or Low-Power Current Inputs, 200 mA Neutral Inputs, and 7 Digital Inputs	4 ACI/3 AVI (7L)	IA, IB, IC, IN, VA, VB, VC	2 AVI/7 DI (LA, LB, LC, LD, LG, LH)	VS, VBAT, 7 DI

The SEL-751 offers an extensive variety of protection features, depending on the model and options selected. *Table 2* lists the protection features available in each model.

Table 2 SEL-751 Protection Elements (Sheet 1 of 2)

Protection Element		Slot Z 4 ACI Card (Current Only Model) With 1 A or 5 A Neutral Channel	Slot Z 4 ACI/ 3 AVI Card With 1 A or 5 A Neutral Channel	Slot Z 4 ACI/ 3 AVI Card With 200 mA Neutral Channel	Slot Z 4 ACI/ 3 AVI LEA Card With 200 mA Neutral Channel
50P	Max. Phase Overcurrent	X	X	X	X
67P	Max. Phase Overcurrent With Directional Control		X[a]	X[b]	X[b]
50Q	Neg.-Seq. Overcurrent	X	X	X	X
67Q	Neg.-Seq. Overcurrent With Directional Control		X[a]	X[b]	X[b]
50G	Residual Overcurrent	X	X	X	X
67G	Residual Overcurrent With Directional Control		X[a]	X[b]	X[b]
50N	Neutral Overcurrent	X	X	X	X
67N	Neutral Overcurrent With Directional Control			X[b]	X[b]
50INC	Incipient Cable Fault Detection	X	X	X	X
51*m*P	Phase Time Overcurrent (*m* = A, B, C)	X	X	X	X
51P	Max. Phase Time Overcurrent	X	X	X	X
51P	Max. Phase Time Overcurrent With Directional Control		X[a]	X[b]	X[b]
51G	Residual Time Overcurrent	X	X	X	X
51G	Residual Time Overcurrent With Directional Control		X[a]	X[b]	X[b]
51Q	Neg.-Seq. Time Overcurrent	X	X	X	X
51Q	Neg.-Seq. Time Overcurrent With Directional Control		X[a]	X[b]	X[b]
51N	Neutral Time Overcurrent	X	X	X	X
51N	Neutral Time Overcurrent With Directional Control			X[b]	X[b]
SEF	Sensitive Earth Fault			X	X
HBL	Second- and Fifth-Harmonic Blocking	X	X	X	X
FLOC	Fault Locator		X	X	X
27	Undervoltage (Phase, Phase-to-Phase, Vsync)		X	X	X
59	Overvoltage (Phase, Phase-to-Phase, Seq., Vsync, 3SRMS)		X	X	X
27I	Inverse-Time Undervoltage		X	X	X

Table 2 SEL-751 Protection Elements (Sheet 2 of 2)

Protection Element		Slot Z 4 ACI Card (Current Only Model) With 1 A or 5 A Neutral Channel	Slot Z 4 ACI/ 3 AVI Card With 1 A or 5 A Neutral Channel	Slot Z 4 ACI/ 3 AVI Card With 200 mA Neutral Channel	Slot Z 4 ACI/ 3 AVI LEA Card With 200 mA Neutral Channel
59I	Inverse-Time Overvoltage		X	X	X
47	Phase Reversal	X	X	X	X
IGF	Intermittent Ground Fault	X[e]	X[c]	X[e]	X[e]
60LOP	Loss of Potential		X	X	X
32	Directional Power		X	X	X
49T	IEC Thermal (Line/Cable)	X	X	X	X
55	Power Factor		X	X	X
78VS	Vector Shift		X	X	X
81	Over- and Underfrequency	X	X	X	X
81R	Rate-of-Change of Frequency		X	X	X
81RF	Fast Rate-of-Change of Frequency		X	X	X
25	Synchronism Check		X[d]	X[d]	X[d]
BF	Breaker Failure	X	X	X	X
49RTD	Resistance Temperature Detectors (RTDs)	X[e]	X[e]	X[e]	X[e]
79	Reclosing	X[e]	X[e]	X[e]	X[e]
HIF AST	High-Impedance Fault Detection With Arc Sense Technology		X[e]	X[e]	X[e]
AFT	Arc-Flash Detection	X[e]	X[e]	X[e]	X[e]
PDD	Phase Discontinuity Detection	X	X	X	X
BCD	Broken Conductor Detection		X[ef]	X[ef]	X[ef]
CLPU	Cold Load Pickup	X	X	X	X
97FM	Frequency Magnitude		X	X	X

[a] Available when ordered with the directional option. The 1 A/5 A neutral channel is suitable for solidly grounded systems and also impedance-grounded systems, depending on the available fault current level.
[b] Available when ordered with the advanced directional option. The 200 mA neutral channel is suitable for ungrounded, low-impedance grounded, high-impedance grounded, and Petersen coil-grounded applications.
[c] Available as ordering options.
[d] Available with the 2 AVI/4 AFDI or 2 AVI/7 DI card in Slot E.
[e] Available as ordering options.
[f] Available only for models with Arc-Sense technology.

Table 3 SEL-751 Front-Panel Options (Sheet 1 of 2)

Model/Display Description[a]	Front-Panel Option (MOT String Digit Number 16)	Number of Pushbuttons	LED Type
SEL-751With Two-Line Display (2 x 16 characters)	0	8	Tricolor
SEL-751 With Two-Line Display (2 x 16 characters)	1	4	Tricolor

Table 3 SEL-751 Front-Panel Options (Sheet 2 of 2)

Model/Display Description[a]	Front-Panel Option (MOT String Digit Number 16)	Number of Pushbuttons	LED Type
SEL-751 With Touchscreen Display (5-inch, color, 800 x 480 pixels)	A	8	Tricolor
SEL-751With Touchscreen Display (5-inch, color, 800 x 480 pixels)	B	4	Tricolor

[a] For ordering options, refer to the SEL-751 MOT.

Functional Overview

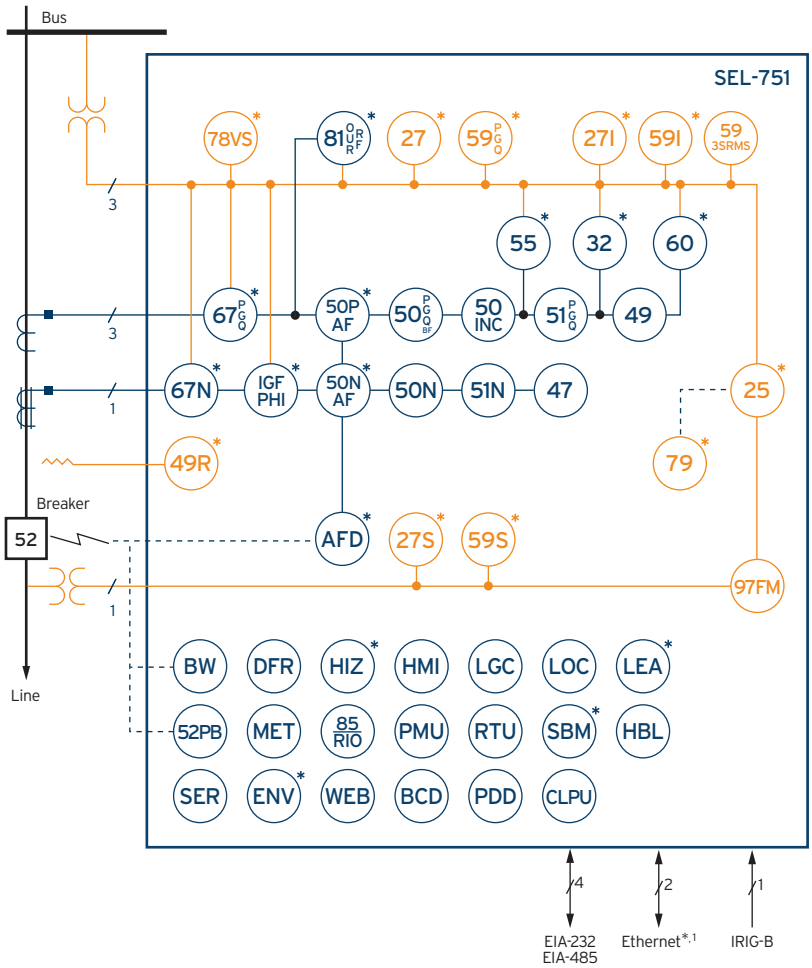

Figure 1 Functional Diagram

ANSI Functions	
25	Synchronism check*
27I	Inverse-time undervoltage
27S	Synchronism-check undervoltage*
32	Directional power*
49	IEC cable/line thermal
49R	RTD*
50	Adaptive overcurrent
50INC	Incipient cable fault detection
50 (P, G, Q, N)	Overcurrent
50PAF/50NAF	Arc-flash overcurrent*
51 (P, G, Q, N)	Time overcurrent
52PB	Trip/Close pushbuttons
55	Power factor*
59 (P, G, Q)	Definite-time overvoltage
59S	Synchronism-check overvoltage*
593SRMS	Overvoltage three-second rms
60	Loss of potential*
67 (P, G, Q)	Directional overcurrent
67N	Directional neutral overcurrent*
78VS	Vector shift*
79	Autoreclosing*
81 (O, U, R, RF)	Over- and underfrequency*
97FM	Frequency component detection

* Optional feature

Additional Functions	
85 RIO	SEL MIRRORED BITS communications
AFD	Arc-flash detector*
BCD	Broken conductor detection*
BW	Breaker wear monitoring
CLPU	Cold-load pickup
DFR	Event reports
HBL	Harmonic blocking
HIZ	AST
HMI	Operator interface
LDE	Load encroachment
LDP	Load data profiling
LEA	Rogowski coil or LPCT inputs and LEA ac voltage inputs (8 Vac RMS)
LGC	SELOGIC control equations
LOC	Fault locator
PDD	Phase discontinuity detection
PMU	Synchrophasors
RTD	10 internal RTD inputs*
RTU	Remote terminal unit
SBM	Station battery monitor
SER	Sequential Events Recorder
WEB	Web server

* Optional feature

Figure 1 Functional Diagram (Continued)

Protection Features

Overcurrent Elements

The SEL-751 includes a robust set of phase, negative-sequence, residual, and neutral overcurrent elements. Each element type has four levels of instantaneous protection with individual torque control and definite-time delay settings. Each element type has two inverse-time overcurrent elements (except negative-sequence, which has one time-overcurrent element). *Table 4* lists the curves available in the SEL-751.

Table 4 Inverse-Time Overcurrent Curves

US	IEC	IEEE
Moderately Inverse	Standard Inverse	Moderately Inverse
Inverse	Very Inverse	Very Inverse
Very Inverse	Extremely Inverse	Extremely Inverse
Extremely Inverse	Long-Time Inverse	
Short-Time Inverse	Short-Time Inverse	

The SEL-751 has two reset characteristic choices for each time-overcurrent element. One choice resets the elements if current drops below pickup for at least one cycle. The other choice emulates electromechanical, induction-disc elements, where the reset time depends on the time dial setting, the percentage of disc travel, and the amount of current.

Overcurrent Elements for Phase Fault Detection

The SEL-751 provides the tools necessary for sensitive fault protection while accommodating heavily loaded circuits. Where heavy loading prevents sufficiently sensitive setting of the phase overcurrent elements to detect lower magnitude phase-to-ground faults, residual-ground overcurrent elements are available to provide sensitive ground fault protection without tripping under balanced heavy load conditions. Similarly, when heavy loading prevents sufficiently sensitive setting of the

phase overcurrent elements to detect lower magnitude phase-to-phase faults, negative-sequence overcurrent elements are available to provide more sensitive phase-to-phase fault detection without tripping under balanced heavy load conditions. You can set phase overcurrent element pickup sufficiently high to accommodate heavy load while retaining sensitivity to higher magnitude three-phase faults.

On extremely heavily loaded feeders, SEL-751 load-encroachment logic adds security in cases when you cannot set phase overcurrent elements to provide adequate three-phase fault sensitivity while also accommodating load. With this logic, you can set the phase overcurrent elements below peak load current so that the relay can detect end-of-line phase faults in heavily loaded feeder applications. This load-encroachment logic uses positive-sequence load-in and load-out elements to discriminate between load and fault conditions based on the magnitude and angle of the positive-sequence impedance. When the measured positive-sequence load impedance (Z1) is within a region the load-encroachment settings define, load-encroachment logic blocks the phase overcurrent elements. As *Figure 2* shows, a phase fault causes Z1 to move from a load region to the line angle and leads to operation of the phase overcurrent elements.

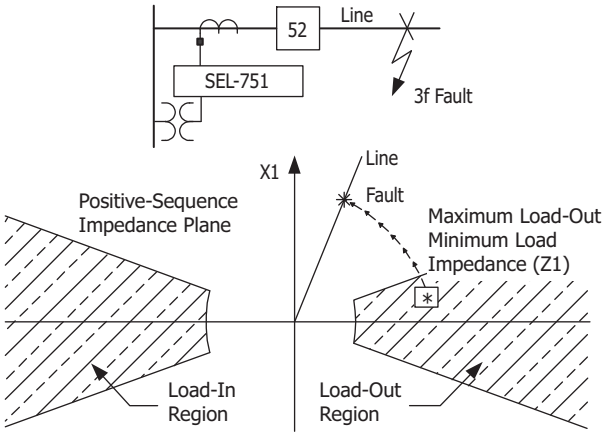

Figure 2 Load Encroachment Characteristics

Overcurrent Elements for Ground Fault Detection

Residual-ground (I_G) and neutral (I_N) overcurrent elements detect ground faults. Increase security by controlling these elements using optoisolated inputs or the internal ground directional element. The SEL-751 protection system includes patented Best Choice Ground Directional Element logic, providing a selection of negative-sequence impedance, zero-sequence impedance, and zero-sequence current polarizing techniques for optimum directional ground element control.

Directional Elements Increase Sensitivity and Security

Phase and ground directional elements come standard in an SEL-751 with the directional control option. An automatic setting mode (EDIR := AUTO or AUTO2) sets all directional threshold settings according to replica positive-sequence and zero-sequence line impedance settings (Z1MAG, Z1ANG, Z0MAG, and Z0ANG) for line protection applications. For all non-line protection applications, set EDIR := Y to enable and set appropriate directional element thresholds. Phase directional elements provide directional control to the phase- and negative-sequence overcurrent elements.

Phase directional characteristics include positive-sequence and negative-sequence directional elements working together. The positive-sequence directional element memory provides a reliable output for close-in, forward, or reverse three-phase faults where each phase voltage is zero.

Ground directional elements provide directional control to the residual-ground and neutral overcurrent elements. Patented negative-sequence, zero-sequence impedance directional elements, and the zero-sequence current directional element use the same principles proven in our SEL transmission line relays. Our patent-pending zero-sequence PHI directional element is a fully customizable element in the zero-sequence complex plane that allows you to flexibly apply the element in ungrounded, impedance-grounded, and Petersen coil-grounded systems. Our patented Best Choice Ground Directional Element logic selects the best available ground directional element for the ORDER setting you provide.

Directional Protection for Various System Grounding Practices

Current channel IN, ordered with an optional 0.2 A secondary nominal rating, provides directional ground protection for the following systems:

- Ungrounded systems
- High-impedance grounded systems
- Petersen coil-grounded systems
- Low-impedance grounded systems

This optional directional control allows the faulted feeder to be identified on a multifeeder bus with an SEL-751 on each feeder (*Figure 3*). Alarm or trip for the ground fault condition with sensitivity down to 5 mA secondary. Our patent-pending directional intermittent ground fault element can be used to detect and trip for arcing faults that can quickly self-extinguish.

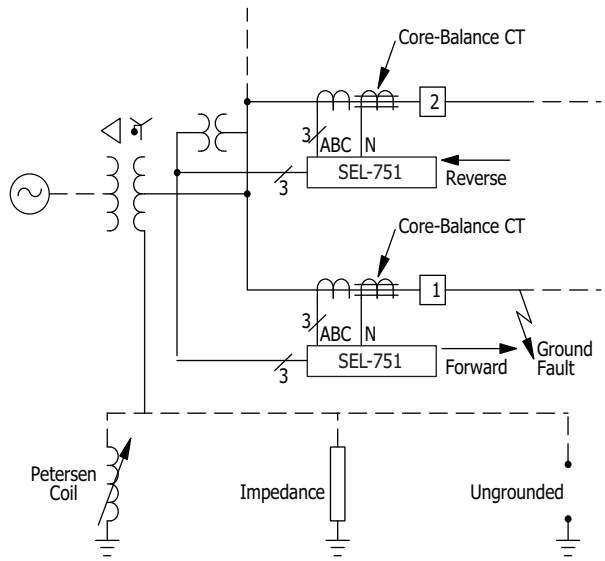

Figure 3 Apply SEL-751 Relays to Petersen Coil-Grounded, Impedance-Grounded, and Ungrounded Systems for Directional Control

Line/Cable Thermal Elements

Power lines and cables are designed to operate under a certain temperature range. Because equipment is often used as close to the operating limits as possible, the importance of protecting equipment against thermal overloads becomes more critical. The thermal overload protection element is used to protect overhead lines and cables against thermal damage (including insulation degradation and loss of equipment life) and to monitor the thermal state of overhead lines and cables. The temperature is calculated using a thermal model according to IEC 60255-149.

Incipient Cable Fault Detection

Cable insulation degrades over time. The incipient cable fault detection element can monitor for self-extinguishing, half-cycle overcurrent events that precede typical cable insulation failure. Monitoring the number of incipient faults can provide an early warning of cable insulation breakdown. This information can be used for preventative maintenance.

Cold-Load Pickup Element

Cold-load pickup is the phenomenon that takes place when a distribution circuit is re-energized following an extended outage of that circuit. It can result in current levels that are significantly higher than normal peak load levels. This excess amount of current draw can be falsely identified as an overcurrent condition by the relay. The cold-load pickup element identifies possible cold-load pickup events based on the settings in a distribution line after an outage. The logic provides Relay Word bits that can be used in programmable torque-control equations of the overcurrent element to enable new trip level settings for the cold-loading period.

Wye or Open-Delta Voltages

You can apply wye-connected (four-wire) voltages or open-delta-connected (three-wire) voltages to three-phase voltage inputs VA, VB, VC, and N, as shown in *Figure 4*. You only need to make a setting change (DELTA_Y := WYE or DELTA_Y := DELTA) and an external wiring change—no internal relay hardware changes or adjustments are necessary. Thus, a single SEL-751 model meets all your distribution protection needs, regardless of available three-phase voltages.

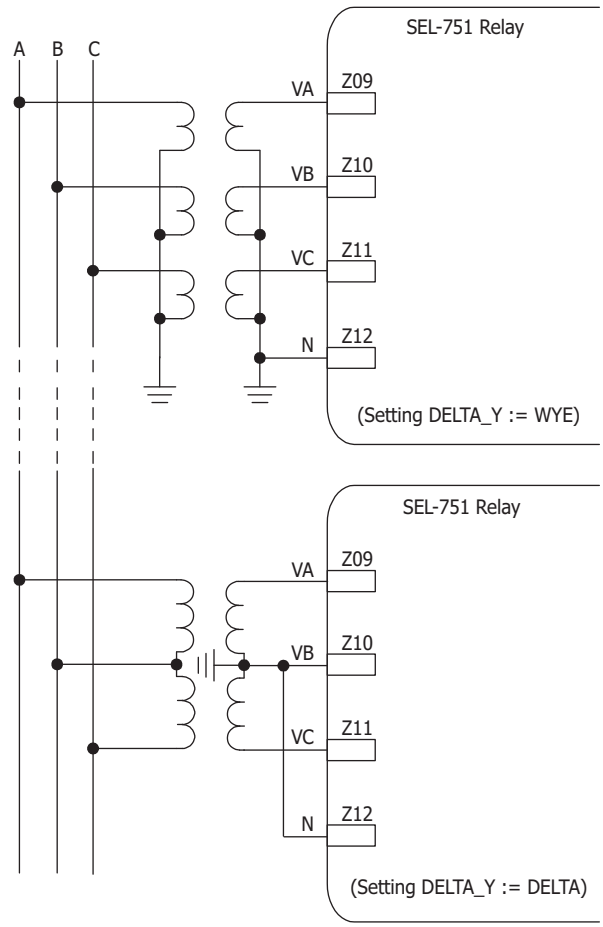

Figure 4 Connect Wye or Open-Delta Voltages to SEL-751 Three-Phase Voltage Inputs

Figure 5 shows the connections for a 3V0 broken-delta input.

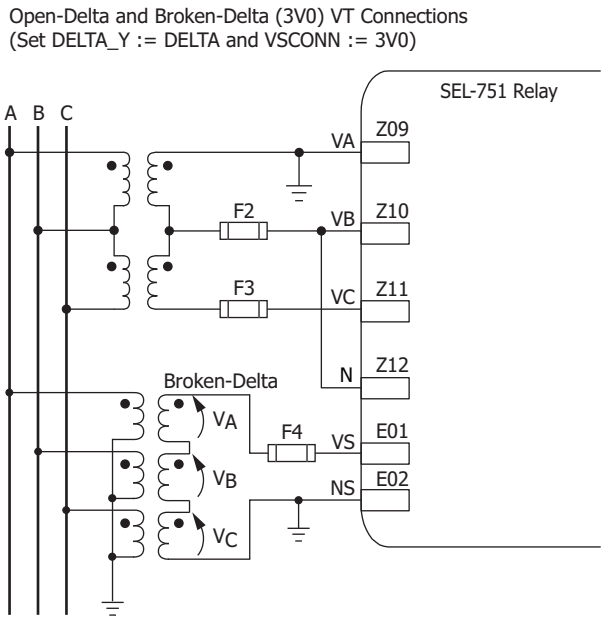

Figure 5 Broken-Delta Connections

In addition, the SEL-751 supports a single voltage input. For customers with a single PT input, the SEL-751 assumes a balanced voltage input for all protection and metering functions.

Loss-of-Potential Logic

The SEL-751 includes loss-of-potential (LOP) logic that detects one, two, or three blown potential fuses. This patented LOP logic is unique because it does not require settings and is universally applicable. The LOP feature allows the blocking of protection elements to add security during fuse failure.

Synchronism Check

When you order the Vsync, Vbat Voltage Input and 4 Arc-Flash Detection Inputs card (SELECT 2 AVI/ 4 AFDI), single-phase voltage (phase-to-neutral or phase-to-phase) is connected to voltage input VS/NS for synchronism check across a circuit breaker (or hot/dead line check). You can use the synchronism-check voltage to coordinate reclosing with the optional recloser control.

Voltage and Frequency Elements for Extra Protection and Control

Over- and Undervoltage Elements

Phase-to-ground, phase-to-phase, negative-sequence, and residual overvoltage (59) and phase-to-ground or phase-to-phase undervoltage (27) elements in the SEL-751 can be used to create the following protection and control schemes.

- Trip/alarm or event report triggers for over- and undervoltage conditions.
- Undervoltage (27) load shedding scheme (having both 27 and 81U load shedding schemes allows detection of system MVAR- and MW-deficient conditions).

Inverse-Time Over- and Undervoltage Elements

Programmable, IEC equation-based inverse-time overvoltage (59I) and undervoltage (27I) elements in the SEL-751 add flexibility in voltage protection and control schemes.

Overvoltage 3-Second RMS Element

The overvoltage 3-second voltage rms (593SRMS) element in the SEL-751 is designed to detect abnormal sustained overvoltage conditions in power systems. It is particularly effective in networks with inverter-based resources (IBR) where voltage behavior can be highly dynamic. The element calculates a 10-minute averaged rms voltage, updated every 3 seconds, to reliably identify sustained conditions. Voltage at the point of interconnection (POI) can fluctuate due to rapid changes in generation, variations in grid strength, and reactive power dynamics. These fluctuations make it essential to distinguish between transient voltage excursions and sustained overvoltage conditions.

Over- and Underfrequency Protection

Six levels of secure overfrequency (81O) or underfrequency (81U) elements detect true frequency disturbances. Use the independently time-delayed output of these elements to shed load or trip local generation. The SEL-751 uses the voltage input to make frequency measurements; it switches automatically to current input when voltages are insufficient.

Implement an internal multistage frequency trip/restore scheme at each breaker location using the multiple over- and underfrequency levels. This method avoids the cost of wiring a complicated trip and control scheme from a separate frequency relay.

Phase Reversal Protection

Relay phase reversal protection detects the phase rotation and trips after a delay if the phase rotation is incorrect. The SEL-751 provides this protection even if phase voltages are not available.

Rate-of-Change-of-Frequency Protection

Four independent rate-of-change-of-frequency elements are provided with individual time delays for use when frequency changes occur (e.g., when there is a sudden unbalance between generation and load). The elements can call for control or switching action, such as network decoupling or load shedding. Each element includes logic to detect either increasing or decreasing frequency and above or below nominal frequency.

Fast Rate-of-Change-of-Frequency Protection for Aurora Vulnerability Mitigation

The fast rate-of-change-of-frequency protection element (81RF) provides a faster response compared to the frequency (81) and the rate-of-change-of-frequency (81R) elements. Fast operating speed makes the 81RF element suitable for detecting islanding conditions. The element uses a characteristic (see *Figure 6*) based on the frequency deviation from the nominal frequency (DF = FREQ – FNOM) and the rate-of-change of frequency (DF3C) to detect islanding conditions.

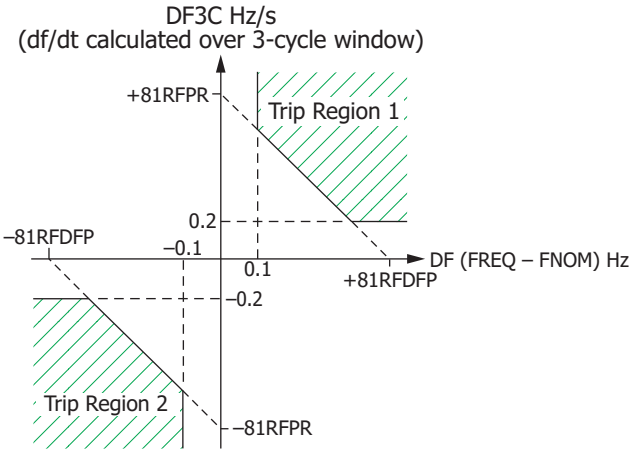

Figure 6 81RF Characteristic Power Element Protection

A time window of three cycles is used to calculate the value of DF3C. Under steady state conditions, the operating point is close to the origin. During islanding conditions, depending on the acceleration of the islanded system, the operating point enters Trip Region 1 or Trip Region 2 of the characteristic. 81RFDFP (in Hz) and 81RFRP (in Hz sec) are the settings used to configure the characteristic.

Frequency Component Detection With the 97FM Element

The 97FM elements monitor the magnitude of a user-selected frequency component in different analog signals by evaluating an individual term of the discrete Fourier transform (DFT). You can use 97FM elements to detect low-frequency power oscillation resulting from subsynchronous resonance or load oscillations.

Vector Shift (78VS) Protection

When distributed generators (DG) are connected to a utility network, the vector shift (78VS) element is used to detect islanding conditions and trip the DG. Failure to trip islanded generators can lead to problems such as personnel safety, out-of-synchronization reclosing, and degradation of power quality. Based on the change in the angle of the voltage waveform, an islanding condition can be detected by the vector shift function.

Use the vector shift element with the 81RF element as a backup for fast and secure islanding detection. The vector shift element operates within three cycles, which is fast enough to prevent reclosing out-of-synchronism with the network feeders to avoid generator damage.

Harmonic Blocking Elements Secure Protection During Transformer Energization

Transformer inrush can cause sensitive protection to operate. Use the second- and fifth-harmonic blocking feature to detect an inrush condition and block selected tripping elements until the inrush subsides. Select the blocking threshold as a percentage of fundamental current, and optimize security and dependability with settable pickup and dropout times. Use the programmable torque control equation only to enable the blocking element immediately after closing the breaker.

Power Element Protection

The SEL-751 provides two power elements for detecting real (watts) or reactive (VARS) positive- or negative-power flow levels for the feeder application. Each power element has a definite-time delay setting.

High-Impedance Fault (HIF) Detection

High-impedance faults are short-circuit faults with fault currents smaller than what a traditional overcurrent protective relay can detect. The main causes of HIFs are

tree branches touching a phase conductor; dirty or failing insulators that cause flashovers between a phase conductor and the ground; or downed conductors touching the ground. The SEL-751 with the Arc Sense™ technology (AST) option includes logic that can detect HIF signatures without being affected by loads or other system operating conditions. A running average provides a stable prefault reference, and adaptive tuning learns and tunes out feeder ambient noise conditions. Decision logic differentiates an HIF condition from other system conditions, such as switching operations and noisy loads. The relay stores as many as 20 minutes of HIF activity in 2-cycle resolution Compressed ASCII and COMTRADE formats and it stores a summary of HIF activity that you can access through the use of ASCII commands.

Phase Discontinuity Detection (PDD) Element

The PDD element uses current unbalance to detect an open conductor. The PDD logic detects a phase discontinuity only for cases that result in an open-phase condition for a minimum of eight power system cycles.

Broken Conductor Detection (BCD) Element

The BCD algorithm is only available for SEL-751 models with the Arc Sense technology (AST) option included. BCD uses the charging current of the line to reliably detect and estimate the location of broken conductors. It can be used to trip the breakers before the conductor touches the ground and creates a shunt fault. Thus, the algorithm can prevent such faults and block any attempt to reclose the line. The BCD function is designed for single-conductor line configurations and can help in mitigating a possible fire or other public hazard.

Arc-Flash Protection

An arcing short circuit or a ground fault in low- or medium-voltage switchgear can cause serious equipment damage and personnel injury, resulting in prolonged and expensive downtime.

The best way to minimize the impact of an arc-flash event is to reduce the detection and circuit breaker tripping times. Conventional protection may need several cycles to detect the resulting overcurrent fault and trip the breaker. In some cases, there may not be sufficient current to detect an overcurrent fault. Tripping may be delayed hundreds of milliseconds for sensitivity and selectivity reasons in some applications.

The arc-flash detection-based (AFD) protection can act on the circuit breaker in a few milliseconds (2–5 ms). This fast response can limit the arc-flash energy, thus preventing injury to personnel and limiting or eliminating equipment damage.

The arc-flash protection option in the SEL-751 adds four- or eight-channel fiber-optic AFD inputs and protection elements. Each channel has a fiber-optic receiver and an LED-sourced fiber-optic transmitter that continuously self-tests and monitors the optical circuit to detect and alarm for any malfunction. There are two types of applications supported by the SEL-751: point sensor applications and fiber sensor applications.

Point Sensor Application

The arc is detected by transmitting the arc-flash light captured by the optical diffuser (located appropriately in the switchgear) over a 1000 µm plastic fiber-optic cable to the optical detector in the relay. The relay performs sensor loopback tests on the optical system using an LED-based transmitter to transmit light pulses at regular intervals to the point-sensor assembly (through a second fiber-optic cable). If the relay optical receiver does not detect this light, the relay declares a malfunction and alarms. *Figure 7* (top) shows a diagram for the point sensor application.

Fiber Sensor Application

Fiber sensor AFD uses a clear-jacketed 1000 µm plastic fiber-optic cable located in the switchgear equipment. One end of the fiber is connected to the optical detector in the relay and the other end is connected to the LED transmitter in the relay. The LED transmitter injects periodic light pulses into the fiber as a sensor loopback test to verify the integrity of the loop. The relay detects and alarms for any malfunction. *Figure 7* (bottom) shows a diagram for the clear-jacketed fiber sensor application.

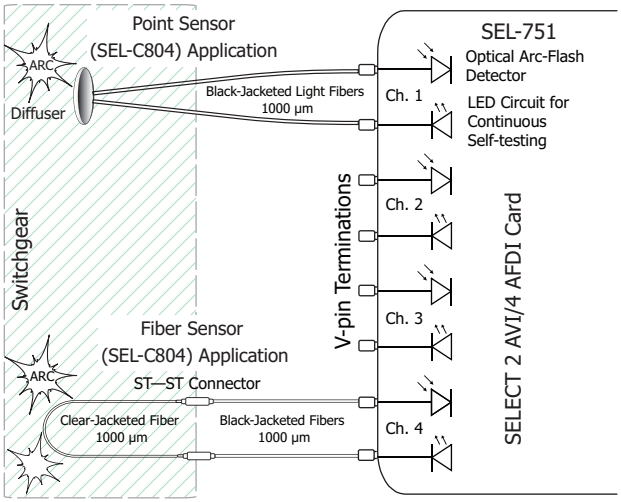

Figure 7 SEL-751 Arc-Flash Detection System

The SEL-751 AFD system provides four or eight channels per relay that can be configured for the point sensor or the clear-jacketed fiber sensor application. The optional fast hybrid outputs (high-speed and high-current) of the relay provide fast-acting trip outputs to the circuit breaker (less than 50 µs). The fast breaker tripping can prevent serious damage or personnel injury in the case of an arc-flash event. The relay also provides light metering and light event capture to aid in setting the relay and capturing the arc-flash event for records and analysis.

Settable arc-flash phase and neutral overcurrent elements are combined with arc-flash light detection elements to provide secure, reliable, and fast acting arc-flash event protection.

RTD Thermal Protection

When the SEL-751 is equipped with either an optional 10 RTD input expansion card or an external SEL-2600 RTD Module with as many as 12 RTD inputs, you can program as many as 12 thermal elements in the relay for two levels of thermal protection per element. Each RTD input provides an alarm and trip thermal pickup setting in degrees Celsius, open and shorted RTD detection, and is compatible with the following three-wire RTD types:

- PT100 (100 Ω platinum)
- NI100 (100 Ω nickel)
- NI120 (120 Ω nickel)
- CU10 (10 Ω copper)

Operator Controls and Reclosing

Operator controls eliminate traditional panel control switches. Four or eight conveniently sized operator controls, each with two programmable tricolor LEDs, are located on the relay front panel (see *Figure 8*). You can set the SER to track the operator controls. Use SELOGIC control equations to change the operator control functions. Use configurable labels to change all of the text shown in *Figure 8*.

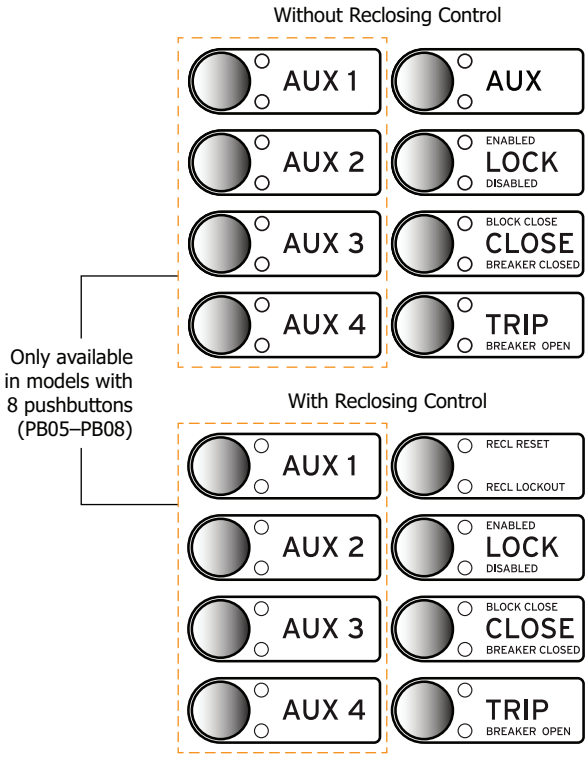

Figure 8 Operator Controls for Standard Model and Optional Reclosing Control Model

In the non-reclosing control SEL-751, you can program the top right operator control and its corresponding two LEDs. When the SEL-751 is ordered with optional reclosing, the two LEDs are programmed to give the status of the reclosing. The two LEDs, **RECL RESET** and **RECL LOCKOUT**, indicate whether the recloser is in the reset or lockout state.

The following operator control descriptions are for factory-set logic.

LOCK: The **LOCK** operator control blocks selected functions. Press it for at least three seconds to engage or disengage the lock function. When the **LOCK** pushbutton is engaged, the **CLOSE** and **TRIP** operators are blocked.

CLOSE and **TRIP:** Use the **CLOSE** and **TRIP** operator controls to close and open the circuit breaker. You can program these controls with intentional time delays to support operational requirements for breaker-mounted relays. This allows you to press the **CLOSE** or **TRIP** pushbutton, then move to an alternate location before the breaker command is executed.

AUXn: You can program the **AUXn** (n = 1, 2, 3, or 4) pushbuttons for additional control of your specific application.

In the SEL-751 with the touchscreen display, you can use the front-panel operator control pushbuttons to jump to a specific screen while also using them for LOCK/TRIP/CLOSE operations, etc. You can program the selectable operator pushbutton screen settings under the Touchscreen settings category in QuickSet to map the button to the specific screen.

Programmable Autoreclosing

When ordered with optional reclosing, the SEL-751 can autoreclose a circuit breaker as many as four times before lockout. Use SELOGIC control equations to program the SEL-751 to perform the following reclosing functions.

- ➤ Allow closing, e.g., when the load-side line is dead, or when the two systems are in synchronism (optional).
- ➤ Advance the shot counter without tripping, e.g., when another protective relay clears a fault, also known as sequence coordination.
- ➤ Initiate reclosing, e.g., for particular protection trip operations.
- ➤ Drive-to-lockout, e.g., when an optoisolated input is deasserted.
- ➤ Delay reclosing, e.g., after a trip caused by a close-in, high-current fault.
- ➤ Flexible reclose supervision failure scheme that allows going to lockout or moving to the next available shot.

The reclosing shot counter controls which protective elements are involved in each reclose interval. Applications include fuse- and trip-saving schemes. The front-panel LEDs (**RECL RESET** and **RECL LOCKOUT**) track the reclosing state.

Built-In Web Server

Every Ethernet-equipped SEL-751 includes a built-in web server. Interface with the relay by using any standard web browser to perform the following actions:

- ➤ Log in with password protection.
- ➤ Safely read the relay settings.
- ➤ Verify the relay self-test status and view the relay configuration.
- ➤ Inspect meter reports.
- ➤ Download SER and event reports.
- ➤ Upload new firmware (firmware upgrade).

Figure 9 shows the fundamental metering screen that can be accessed by clicking **Meter** > **Fundamental**. Use the Meter menu to view all the available relay metering statistics.

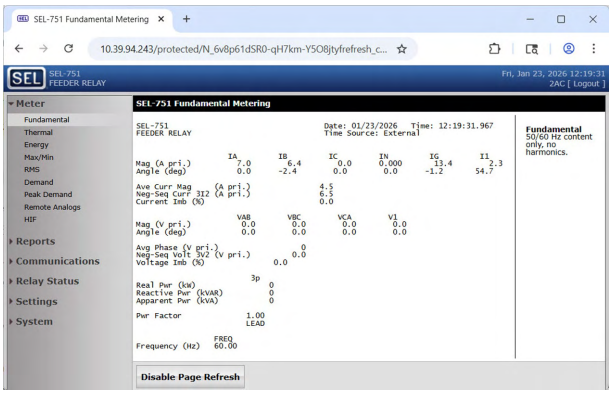

Figure 9 Fundamental Meter Report Webpage

Figure 10 shows the Group 1 settings webpage. You can view the settings of each relay settings class by selecting **Settings** and the respective relay settings class.

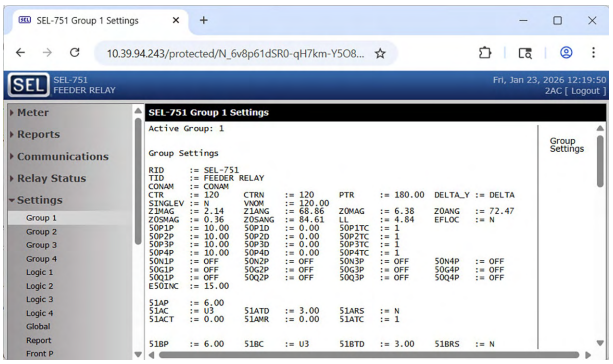

Figure 10 Group 1 Settings Webpage

You can upgrade the relay firmware through the relay web server by clicking **System** > **File Management** (available at Access Level 2) and selecting the firmware upgrade file. *Figure 11* shows the firmware upgrade webpage.

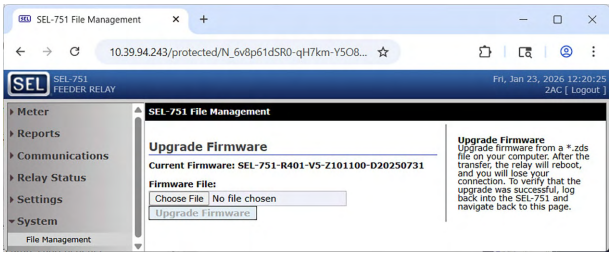

Figure 11 Upgrade the Relay Firmware From the File Management Webpage

Relay and Logic Settings Software

QuickSet simplifies settings and provides analytical support for the SEL-751. There are several ways to create and manage relay settings with QuickSet.

- Develop settings offline with an intelligent settings editor that only allows valid settings.
- Create SELOGIC control equations with a drag-and-drop text editor.
- Configure proper settings using online help.
- Organize settings with the relay database manager.
- Load and retrieve settings using a simple PC communications link.

With QuickSet, you can verify settings and analyze power system events with the integrated waveform and harmonic analysis tools.

Use the following features of QuickSet to monitor, commission, and test the SEL-751.

- Use the HMI to monitor meter data, Relay Word bits, and output contact statuses during testing.
- Use the PC interface to remotely retrieve power system data.
- Use the Event Report Analysis tool for easy retrieval and visualization of ac waveforms and digital inputs and outputs the relay processes.
- Use the graphical current phasor display in the HMI to visualize differential current relationships.
- Use bay control to design new bay screens and edit existing bay screens by launching ACSELERATOR Bay Screen Builder SEL-5036 Software for SEL-751 relays with the touchscreen display.

ACSELERATOR Bay Screen Builder SEL-5036 Software

The SEL-751 with the touchscreen display option provides you with the ability to design bay configuration screens to meet your system needs. You can display the bay configuration as a single-line diagram (SLD) on the touchscreen. You can use ANSI and IEC symbols, along with analog and digital labels, for the SLD to indicate the status of the breaker and disconnects, bus voltages, and power flow through the breaker. In addition to SLDs, you can design the screens to show the status of various relay elements via Relay Word bits or to show analog quantities for commissioning or day-to-day operations. You can design these screens with the help of Bay Screen Builder in conjunction with QuickSet. Bay Screen Builder provides an intuitive and powerful interface to design bay screens to meet your application needs.

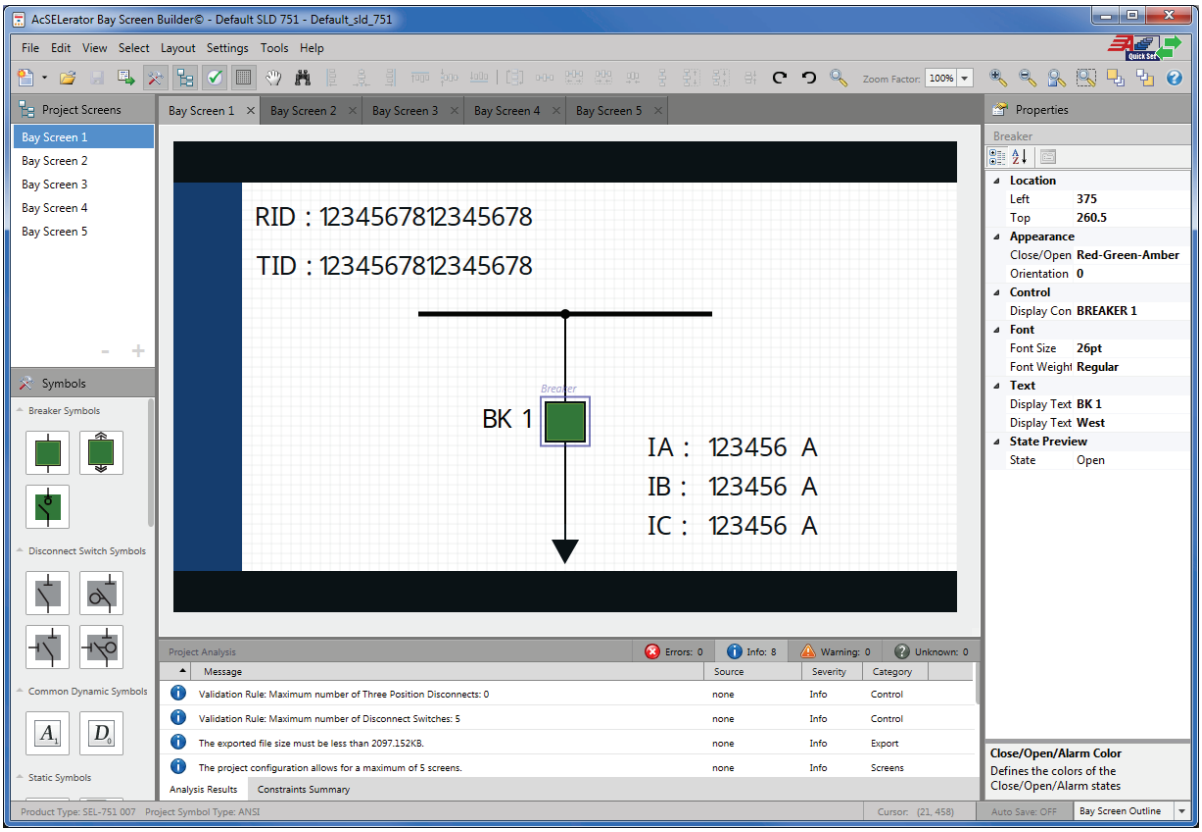

Figure 12 Bay Screen Builder

Metering and Monitoring

The SEL-751 provides extensive metering capabilities. See *Specifications on page 33* for metering and power measurement accuracies. As shown in *Table 5*, metered quantities include phase voltages and currents; neutral current, sequence voltages and currents; power, frequency, and energy; and maximum/minimum logging of selected quantities. The relay reports all metered values in primary quantities (current in A primary and voltage in V primary).

Table 5 SEL-751 Metered Values (Model Dependent) (Sheet 1 of 2)

Types of Metering			
Instantaneous	Light	Analog Inputs	Energy
Math Variables	RMS	Remote Analogs	Thermal
Demand and Peak Demand	Synchrophasors	Max/Min	HIF (High-Impedance Fault)
Harmonics			

Quantities	Description
Currents IA, IB, IC	Phase current magnitude and angle, primary A
IN	Neutral current magnitude and angle, primary A
IG	Residual-ground fault current and angle, primary A (IG = 3I0 = IA + IB + IC)
Currents IAV, UBI	Average current magnitude, current unbalance
Voltages VA, VB, VC	Phase voltage and angles, primary volts, for wye-connected voltage inputs
Voltages VAB, VBC, VCA	Phase-to-phase voltages and angles, primary volts, for delta-connected voltage inputs
Voltages VAVE, UBV	Average voltage magnitude, voltage unbalance

Table 5 SEL-751 Metered Values (Model Dependent) (Sheet 2 of 2)

Types of Metering			
Instantaneous Math Variables Demand and Peak Demand Harmonics	Light RMS Synchrophasors	Analog Inputs Remote Analogs Max/Min	Energy Thermal HIF (High-Impedance Fault)

Quantities	Description
Voltage VS	Synchronism-check voltage magnitude and angle, primary volts
Power kVA, kW, kVAR[a]	Calculated apparent, real, and reactive power scales to primary values (single- and three-phase)
Energy MWh, MVARh, MVAh	Three-phase positive and negative megawatt-hours, megavar-hours, and megavolt-amp-hours
Power Factor PF[a]	Single- and three-phase power factor (leading or lagging)
Sequence I1, 3I2, 3I0, V1, 3V2, 3V0	Positive-, negative-, and zero-sequence currents and voltages
Voltage VDC	Station battery voltage or VBAT channel ac voltage depending on the Global setting EDCMON
Frequency FREQ	Instantaneous system frequency (Hz)
Frequency FREQS	Instantaneous frequency (Hz) of synchronism-check voltage channel
Light Intensity (%) LS1–LS8	Arc-flash light inputs in percentage of full scale
AI*x*01–AI*x*08 (*x* = 3, 4, or 5)	Analog inputs
MV01–MV64	Math variables
RA001–RA128	Remote analogs
Thermal Element *x* Current THIEQ*x* pu TCU THTCU*x*% Trip Time THTRIP*x* s Release Time THRLS*x* s	Element *x* pu current level, thermal capacity, time to trip, and time to reset values, where *x* = 1, 2, or 3
RTD1–RTD12	RTD temperature measurement (degrees C)

[a] Single-phase power and power factor quantities are not available when delta-connected PTs are used.

Load Profile

The SEL-751 features a programmable Load Data Profile (LDP) recorder that records as many as 17 metering quantities into nonvolatile memory at fixed time intervals. The LDP saves several days to several weeks of the most recent data depending on the LDP settings (6,500 entries total).

Synchrophasor Measurements

Combine the SEL-751 with an SEL-IRIG-B time source to measure the system angle in real time with a timing accuracy of ±10 µs. Measure instantaneous voltage and current phase angles in real time to improve system operation with synchrophasor information. Replace state measurement, study validation, or track system stability. Use SEL-5703 Synchrowave Monitoring software to view system angles at multiple locations for precise system analysis and system-state measurement (see *Figure 13*).

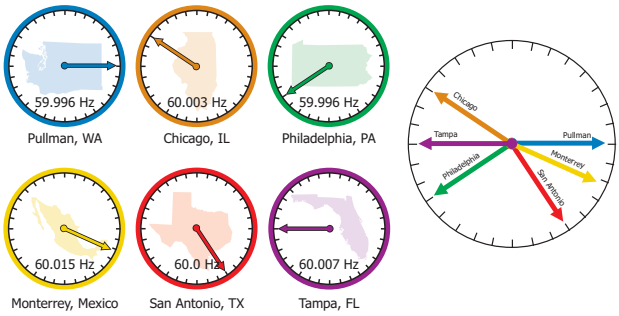

View system angle at multiple locations.

Figure 13 View of System Angle at Multiple Locations

Use IEEE C37.118-2005 protocol to send synchrophasor data to SEL synchrophasor applications. These include the SEL-3378 Synchrophasor Vector Processor (SVP), SEL-3530 Real-Time Automation Controller (RTAC), and the Synchrowave Operations and Synchrowave Monitoring software suites.

The SEL-3373 Station Phasor Data Concentrator (PDC) and the SEL-5073 SYNCHROWAVE PDC Software correlate data from multiple SEL-751 relays and concentrate the result into a single output data stream.

These products also provide synchrophasor data archiving capability. The SEL-3378 SVP enables control applications based on synchrophasors. Directly measure the oscillation modes of your power system and then act on the result. Use wide-area phase angle slip and acceleration measurements to properly control islanding of distributed generation. With the SVP, you can customize a synchrophasor control application according to the unique requirements of your power system.

The data rate of the SEL-751 synchrophasors is selectable with a range of 1–60 messages per second. This flexibility is important for the efficient use of the communication capacity.

The SEL-751 phasor measurement accuracy meets the highest IEEE C37.118-2005 Level 1 requirement of 1 percent total vector error (TVE). This means you can use any SEL-751 model in an application that otherwise would require purchasing a separate dedicated phasor measurement unit (PMU).

Use the SEL-751 with SEL communications processors or RTACs to change nonlinear state estimation into linear state estimation. If all lines include synchrophasor measurements, state estimation is no longer necessary. The system state is directly measured.

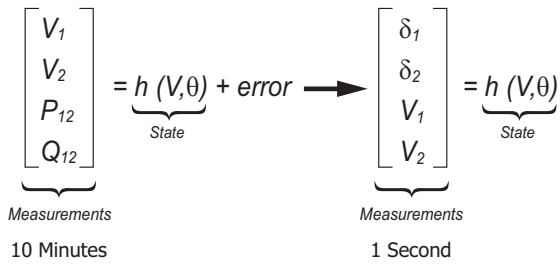

Figure 14 Synchrophasor Measurements Turn State Estimation Into State Measurement

Improve Situational Awareness

Provide improved information to system operators with advanced synchrophasor-based tools that produce a real-time view of system conditions. Use system trends, alarm points, and preprogrammed responses to help operators maximize system stability and prevent a cascading system collapse. Awareness of system trends provides operators with an understanding of future values based on measured data.

- ➤ Increase system loading while maintaining adequate stability margins.
- ➤ Improve operator response to system contingencies such as overload conditions, transmission outages, or generator shutdown.
- ➤ Advance system knowledge with correlated event reporting and real-time system visualization.
- ➤ Validate planning studies to improve system load balance and station optimization.

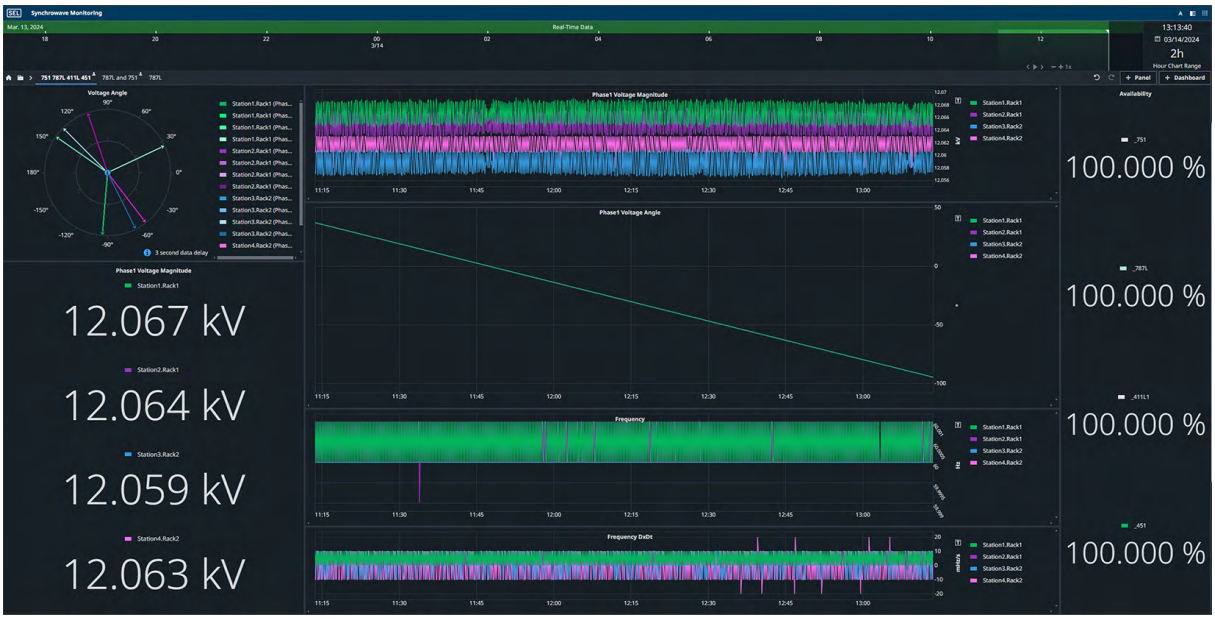

Figure 15 Visualization of Phase Angle Measurements Across a Power System

Event Reporting and SER

Event reports and the SER simplify post-fault analysis and improve understanding of simple and complex protective scheme operations. In response to a user-selected trigger, the voltage, current, frequency, and element status information contained in each event report confirms relay, scheme, and system performance for every fault. Decide how much detail is necessary when you request an event report (e.g., 1/4-cycle or 1/32-cycle resolution, filtered or raw analog data, respectively).

The relay stores as many as 5 of the most recent 300-cycle event reports, 8 of the most recent 180-cycle event reports, 20 of the most recent 64-cycle event reports, or 40 of the most recent 15-cycle event reports in nonvolatile memory. The relay always appends the relay settings to the bottom of each event report.

The following analog data formats are available:

- 1/4-cycle or 1/32-cycle resolution, filtered or unfiltered analog, ASCII or Compressed ASCII reports
- 1/32-cycle resolution COMTRADE reports

The relay SER feature stores the latest 1,024 entries. Use this feature to gain a broad perspective at a glance. An SER entry helps to monitor input/output change-of-state occurrences and element pickup/dropout.

Synchronized Measurements

The IRIG-B time-code input synchronizes the SEL-751 internal clock time to within ±1 µs of the time-source input. Convenient sources for this time code are an SEL-2401 Satellite-Synchronized Clock, an SEL communications processor, or an SEL RTAC (via Serial Port 2 or 3 on the SEL-751). For time accuracy specifications for metering, synchrophasors, and events, see *Specifications* on page 33.

Substation Battery Monitor

The SEL-751 relays that include the enhanced voltage option with the monitoring package measure and report the substation battery voltage connected to the VBAT terminals. The relay includes two programmable threshold comparators and associated logic for alarm and control. For example, if the battery charger fails, the measured dc falls below a programmable threshold. The SEL-751 alarms to alert operations personnel before the substation battery voltage falls to unacceptable levels. Monitor these thresholds with an SEL communications processor and trigger messages, telephone calls, or other actions.

The measured dc voltage appears in the meter display and the Vdc column of the event report. Use the event report column data to see an oscillographic display of the battery voltage. This display shows how much the substation battery voltage drops during trip, close, and other control operations.

Circuit Breaker Contact Wear Monitor

Circuit breakers experience mechanical and electrical wear every time they operate. Intelligent scheduling of breaker maintenance takes into account a manufacturer's published data of contact wear versus interruption levels and operation count. With the breaker manufacturer's maintenance curve as input data, the SEL-751 breaker monitor feature compares this input data to the measured (unfiltered) ac current at the time of a trip and the number of close-to-open operations.

Every time a breaker trips, the relay integrates the measured current information. When the result of this integration exceeds the breaker wear curve threshold (see *Figure 16*), the relay alarms via output contact, communications port, or front-panel display. This information allows timely and economical scheduling of breaker maintenance.

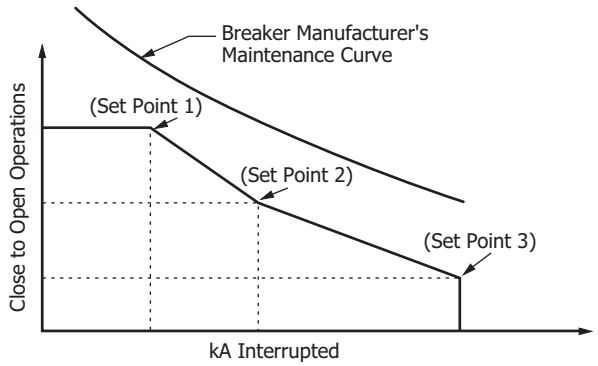

Figure 16 Breaker Contact Wear Curve and Settings

The relay also provides analog quantities that calculate the mechanical and electrical operate times along with the mechanical close time for the circuit breaker. The operate and close time Relay Word bits can also be accessed via SELOGIC, HMI, display point, Fast Meter, Modbus, DNP3, EtherNet/IP, or IEC 61850.

Fault Locator

The SEL-751 provides a valuable estimate of fault location even during periods of substantial load flow. The fault locator uses fault type, replica line impedance settings, and fault conditions to calculate fault location. This feature, which operates without the use of communications channels, special instrument transformers, or

prefault information, contributes to the efficient dispatch of line crews and fast restoration of service. The fault locator uses three-phase voltage inputs. Wye-connected voltages are necessary for phase and ground fault distance calculations.

Only phase fault distance calculations are available with delta-connected voltages. The fault locator is unavailable in the absence of voltage or single-phase voltage connections.

IEC 61850 Test Mode

Test Mode allows you to test an in-service relay without operating control output contacts. Test Mode includes five different modes.

On: In On mode, the relay operates as normal; it reports IEC 61850 Mode/Behavior status as On and processes all inputs and outputs as normal. If the quality of the subscribed GOOSE messages satisfies the GOOSE processing, the relay processes the received GOOSE messages as valid.

Blocked: This mode is similar to On mode, except that the relay does not trip any physical contact outputs.

Test: In Test mode, the relay processes valid incoming test signals and normal messages and operates physical contact outputs, if the outputs are triggered.

Test/Blocked: This is similar to Test mode, except that the relay does not trip any physical contact outputs.

Off: The relay does not process any incoming data or control commands (except commands to change the mode). All protection logic is disabled and all data quality is marked as invalid.

Simulation: In this mode, the relay continues to process normal GOOSE or Fixed GOOSE messages until a simulated GOOSE or Fixed GOOSE message is received for a subscription. Once a simulated GOOSE or Fixed GOOSE message is received, only simulated GOOSE or Fixed GOOSE messages are processed for that subscription. The simulation mode only terminates when LPHD-SIM is returned to FALSE. When the relay is not in simulation mode, only normal GOOSE or Fixed GOOSE messages are processed for all subscriptions.

Touchscreen Display

You can order the SEL-751 Feeder Protection Relay with an optional touchscreen display (5-inch, color, 800 x 480 pixels). The touchscreen display makes relay data metering, monitoring, and control quick and efficient. The touchscreen display option in the SEL-751 features a straightforward, application-driven control structure and includes intuitive and graphical screen designs.

The touchscreen display allows you to:

- View and control bay screens
- Access metering and monitoring data
- Inspect targets
- View event history, summary data, and SER information
- View relay status and configuration
- Control relay operations
- View and edit settings
- Enable the rotating display
- Program control pushbuttons to jump to a specific screen

You can navigate the touchscreen by tapping the folders and applications. The folders and applications of the **Home** screen are shown in *Figure 17*. Folders and applications are labeled according to functionality. Additional folder and application screens for the SEL-751 touchscreen display option can be seen in *Figure 18* through *Figure 26*.

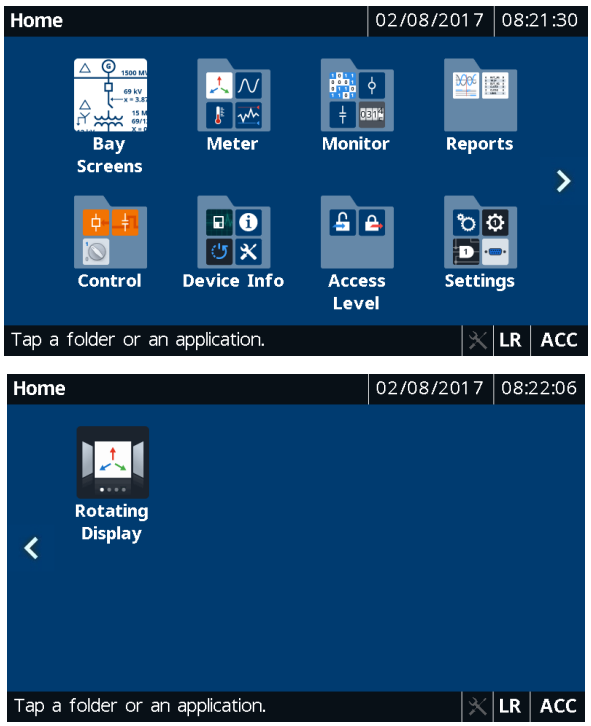

Figure 17 Home (Default FPHOME Screen)

Bay Screens Application

The SEL-751 with the touchscreen display option provides you with the ability to design bay configuration screens to meet your system needs. The bay configuration can be displayed as an SLD on the touchscreen. You can create as many as five bay screens with one controllable breaker, eight controllable two-position disconnects, and two controllable three-position disconnects. ANSI and IEC symbols, along with analog and digital labels, are available for you to create detailed SLDs of the bay to indicate the status of the breaker and disconnects, bus voltages, and power flow through the breaker. *Figure 18* shows the default SLD for the touchscreen display option.

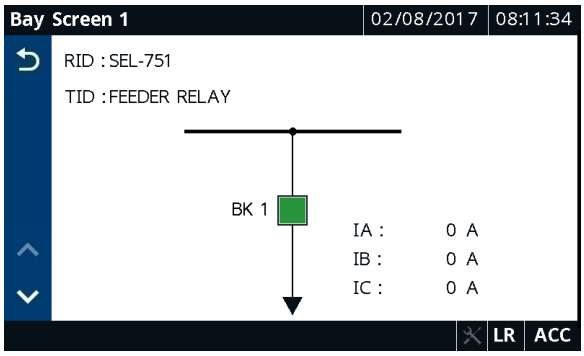

Figure 18 Default Bay Screen

Meter Folder Applications

The applications in the Meter folder are part-number dependent. Only those metering applications specific to your part number appear in the Meter folder. Tapping an application in the Meter folder shows you the report for that particular application. Tap the **Phasor** application to view the current and voltage phasors (see *Figure 19*).

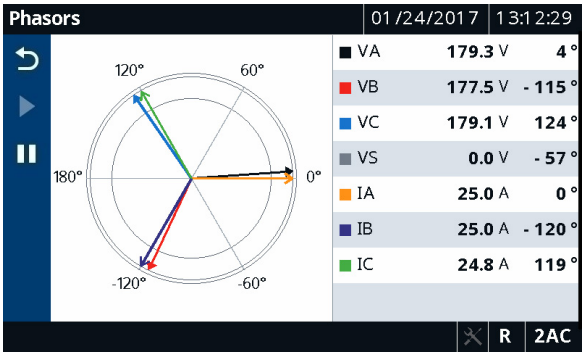

Figure 19 Meter Phasors

Tap the **Energy** application to view the energy metering quantities (see *Figure 20*). A reset feature is provided for the Energy, Max/Min, Demand, and Peak Demand applications. Tap the **Reset** button (see *Figure 20*) to navigate to the reset confirmation screen. Once you confirm the reset, the data are reset to zero.

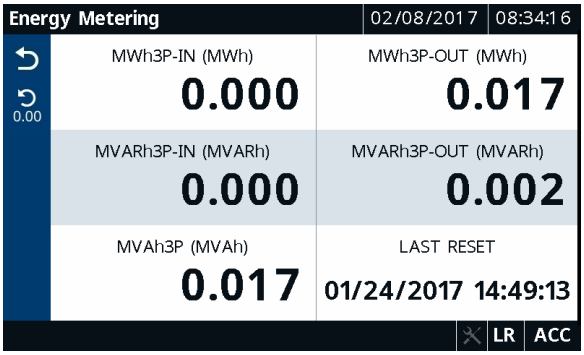

Figure 20 Meter Energy

Reports Folder Applications

Tapping the **Reports** folder navigates you to the screen where you can access the Events, HIF Events (if available), and SER applications. Use these applications to view events and SERs. To view the event summary (see *Figure 21*) of a particular event record, tap the event record on the Event History screen (for Events and HIF Events). You can also trigger an event report from the Event History screen.

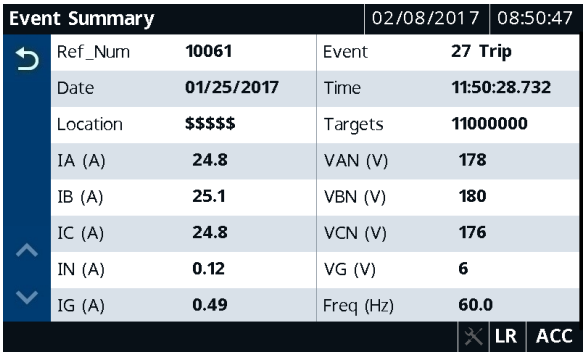

Figure 21 Event Summary

Tap the **Sequential Events Recorder** application to view a history of the SER reports (see *Figure 22*).

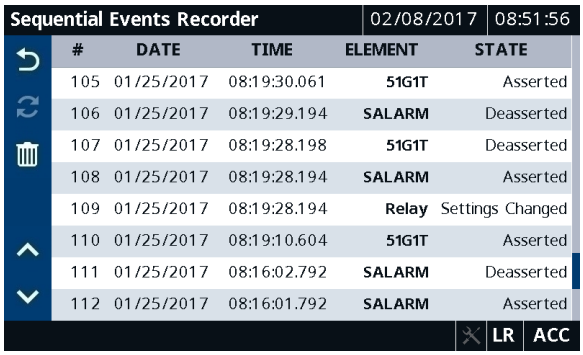

Figure 22 Sequential Events Recorder

Tapping the **Trash** button, shown in *Figure 22*, on the Event History, HIF Event History, and Sequential Events Recorder screens and confirming the delete action removes the records from the relay.

Control Folder Applications

Tapping the **Control** folder navigates you to the screen where you can access the Breaker Control, Output Pulsing, and Local Bits applications. Use the applications to perform breaker control operations, pulse output contacts (*Figure 23*), and control the local bits (*Figure 24*).

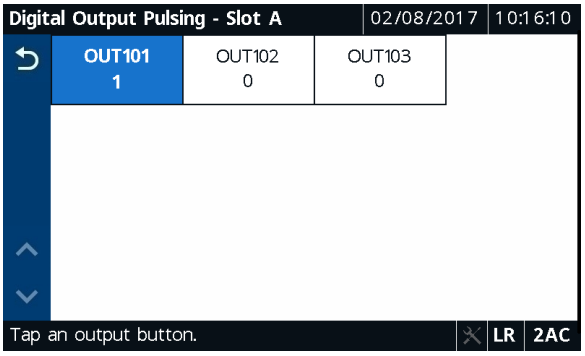

Figure 23 Digital Output Pulsing-Slot A

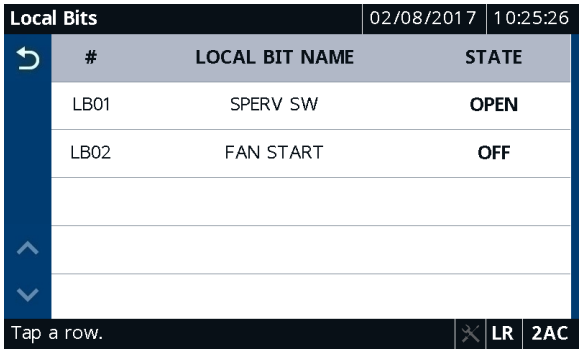

Figure 24 Local Bits

Device Info Folder Applications

Tapping the **Device Info** folder navigates you to the screen where you can access specific device information applications (Status, Configuration, Arc-Flash Diagnostics, and Trip & Diag. Messages) and the Reboot application. Tap the **Status** application to view the relay status, firmware version, part number, etc. (see *Figure 25*).

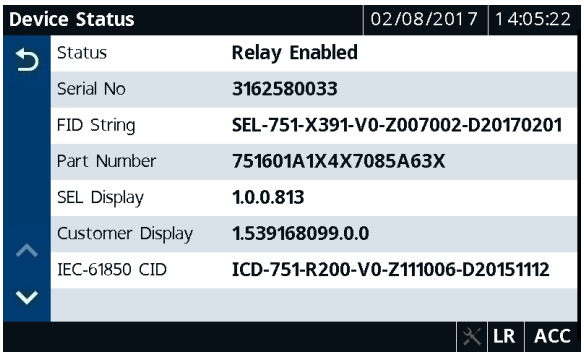

Figure 25 Device Status

To view the trip and diagnostic messages, tap the **Trip & Diag. Messages** application (see *Figure 26*). When a diagnostic failure, trip, or warning occurs, the relay displays the diagnostic message on the screen until it is either overridden by the restart of the rotating display or the inactivity timer expires.

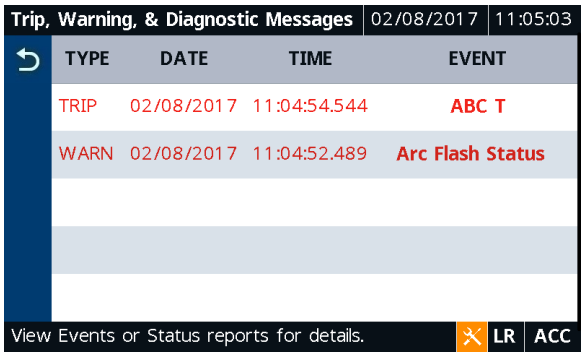

Figure 26 Trip and Diagnostics

Automation

Flexible Control Logic and Integration Features

The SEL-751 can be ordered with as many as four independently operated serial ports:

- EIA-232 port on the front panel
- EIA-232 or EIA-485 port on the Slot B card in the rear
- EIA-232 fiber-optic port on the Slot B card in the rear
- EIA-232 or EIA-485 port on the optional communications card in Slot C in the rear

Optionally, the relay supports single or dual, copper or fiber-optic Ethernet ports. The relay does not require special communications software. You can use any system that emulates a standard terminal system for engineering access to the relay. Establish local or remote communication by connecting computers, modems, protocol converters, printers, an SEL RTAC, SEL communications processor, SEL computing platform, SCADA serial port, or RTUs. Refer to *Table 6* for a list of communications protocols available in the SEL-751.

Table 6 Communications Protocols

Type	Description
Simple ASCII	Plain language commands for human and simple machine communications. Use for metering, setting, self-test status, event reporting, and other functions.
Compressed ASCII	Comma-delimited ASCII data reports. Allows external devices to obtain relay data in an appropriate format for direct import into spreadsheets and database programs. Data are checksum protected.
SEL Fast Meter and SEL Fast Operate	Binary protocol for machine-to-machine communications. Quickly updates SEL communications processors, RTUs, and other substation devices with metering information, relay elements, I/O status, time-tags, open and close commands, and summary event reports. Data are checksum protected. Binary and ASCII protocols operate simultaneously over the same communications lines, so control operator metering information is not lost while a technician is transferring an event report.
SEL Fast SER	Provides SER events to an automated data collection system.
DNP3	Serial or Ethernet-based DNP3 protocols. Provides default and mappable DNP3 objects that include access to metering data, protection elements, Relay Word bits, contact I/O, targets, SER, relay summary event reports, and setting group selection.
Modbus	Serial- or Ethernet-based Modbus protocol with point remapping. Includes access to metering data, protection elements, contact I/O, targets, SER, relay summary event reports, and setting groups.
IEC 61850 Edition 2.1	Ethernet-based international standard for interoperability between intelligent devices in a substation. Operates remote bits and I/O. Monitors Relay Word bits and analog quantities. Supports Fixed GOOSE peer-to-peer communication with eight setting selectable analog quantities and Relay Word bits.
Synchrophasors	IEEE C37.118-2005-compliant synchrophasors for system state, response, and control capabilities.
DeviceNet	Allows for connection to a DeviceNet network for access to metering data, protection elements, contact I/O, targets, and setting groups. (The DeviceNet option has been discontinued and is no longer available to order as of September 25, 2017.)
SNTP	Ethernet-based protocol that provides time synchronization of the relay.
IEEE 1588-2008 PTP	Ethernet-based protocol that provides time synchronization of the relay. Hardware- or firmware-based PTP is available based on the network operating mode, PTP profile, PTP transport mechanism, PTP path delay mechanism settings, and the firmware version.
PRP	Provides seamless recovery from any single Ethernet network failure in a dual redundant Ethernet network in accordance with IEC 62439-3.
RSTP	Provides faster recovery in response to changes and failures in switched mode, dual redundant Ethernet networks in accordance with IEEE 802.1Q-2014.
HSR	Provides faster recovery in response to changes and failures in switched mode, dual redundant Ethernet networks in accordance with IEC 61784.
IEC 60870-5-103	Serial communications protocol—international standard for interoperability between intelligent devices in a substation.
EtherNet/IP	Ethernet-based protocol that provides access to metering data, protection elements, targets, and contact I/O.

Apply an SEL communications processor as the hub of a star network with a point-to-point fiber or copper connection between the hub and the SEL-751 (see *Figure 27*).

The communications processor supports external communications links, including the public switched telephone network, for engineering access to dial-out alerts and private line connections of the SCADA system.

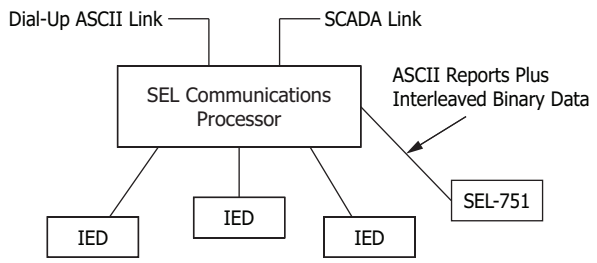

Figure 27 Example Communications System

SEL manufactures a variety of standard cables for connecting this and other relays to a variety of external devices. Consult your SEL representative for more information on cable availability.

SEL-751 control logic improves integration in the following ways.

- **Replaces traditional panel control switches.** Eliminate traditional panel control switches with 32 local bits. Set, clear, or pulse local bits with the front-panel pushbuttons and display. Program the local bits into your control scheme with SELOGIC control equations. Use the local bits to perform functions such as a trip test or a breaker trip/close.
- **Eliminates RTU-to-relay wiring with 64 remote bits.** Set, clear, or pulse remote bits using serial port commands. Program the remote bits into your control scheme with SELOGIC control equations. Use remote bits for SCADA-type control operations such as trip, close, and settings group selection.
- **Replaces traditional latching relays.** Replace as many as 64 traditional latching relays for such functions as remote control enable with latch bits. Program latch set and latch reset conditions with SELOGIC control equations. Set or reset the nonvolatile latch bits using optoisolated inputs, remote bits, local bits, or any programmable logic condition. The latch bits retain their state when the relay loses power.
- **Replaces traditional indicating panel lights.** Replace traditional indicating panel lights with 32 programmable displays. Define custom messages (e.g., `Breaker Open`, `Breaker Closed`) to report power system or relay conditions on the front-panel display. Use advanced SELOGIC control equations to control which messages the relay displays.
- **Eliminates external timers.** Eliminate external timers for custom protection or control schemes with 64 general purpose SELOGIC control equation timers. Each timer has independent time-delay pickup and dropout settings. Program each timer input with the element you want (e.g., time qualify a current element). Assign the timer output to trip logic, transfer trip communications, or other control scheme logic.
- **Eliminates setting changes.** Selectable setting groups make the SEL-751 ideal for applications requiring frequent setting changes and for adapting the protection to changing system conditions. The relay stores four setting groups. Select the active setting group by optoisolated input, command, or other programmable conditions. Use these setting groups to cover a wide range of protection and control contingencies. Switching setting groups switches logic and relay element settings. Program groups for different operating conditions, such as feeder paralleling, station maintenance, seasonal operations, emergency contingencies, loading, source changes, and downstream relay setting changes.

Ethernet Network Architectures

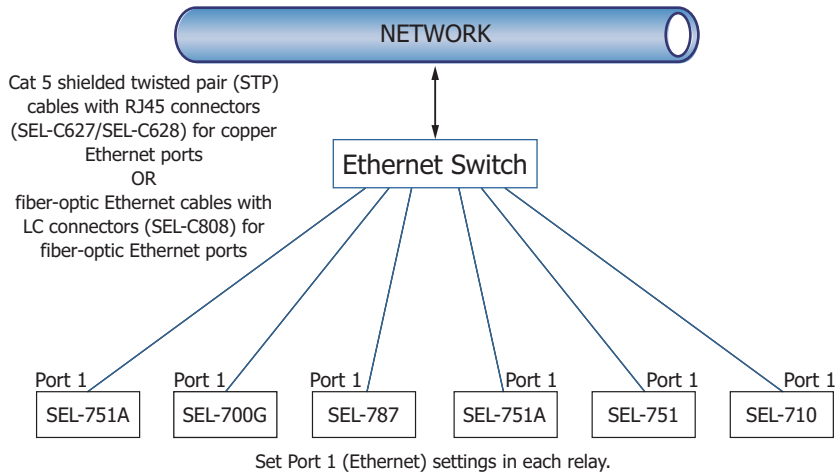

Figure 28 Simple Ethernet Network Configuration

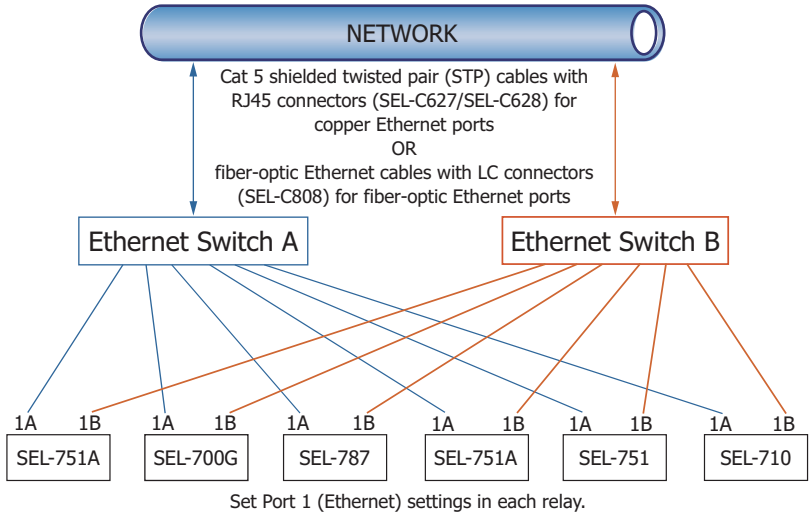

Figure 29 Ethernet Network Configuration With Dual Redundant Connections (Failover Mode)

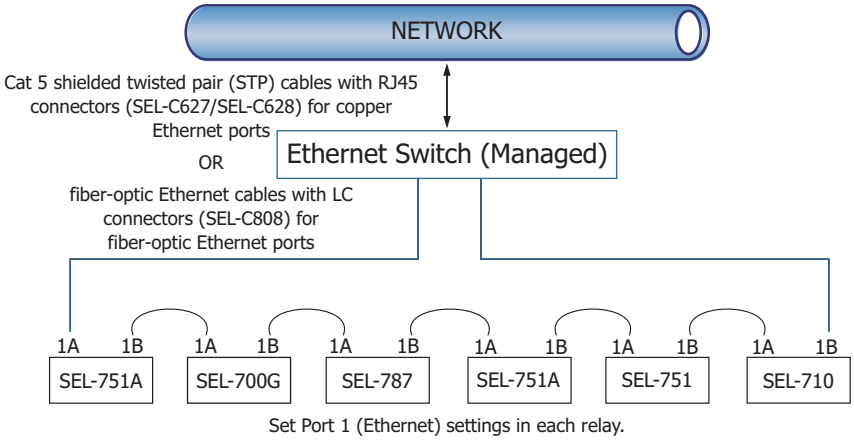

Figure 30 Ethernet Network Configuration With Ring Structure (Switched Mode)

Additional Features

MIRRORED BITS Relay-to-Relay Communications

The SEL-patented MIRRORED BITS communications technology provides bidirectional relay-to-relay digital communications. MIRRORED BITS communications can operate independently on as many as two EIA-232 rear serial ports and one fiber-optic rear serial port on a single SEL-751.

This bidirectional digital communication creates eight additional virtual outputs (transmitted MIRRORED BITS) and eight additional virtual inputs (received MIRRORED BITS) for each serial port operating in the MIRRORED BITS mode (see *Figure 31*). Use these MIRRORED BITS to transmit/receive information between upstream relays and a downstream recloser control (e.g., SEL-351R) to enhance coordination and achieve faster tripping for downstream faults. MIRRORED BITS technology also helps reduce total scheme operating time by eliminating the need to assert output contacts to transmit information.

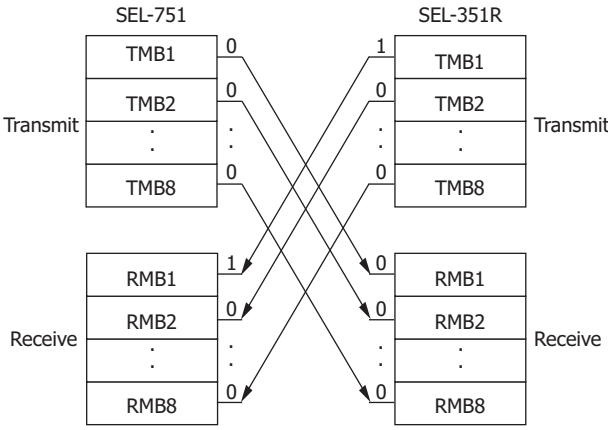

Figure 31 MIRRORED BITS Transmit and Receive Bits

Status and Trip Target LEDs

The SEL-751 includes 24 status and trip target tricolor LEDs on the front panel. When shipped from the factory, all LEDs are predefined and fixed in settings. You can reprogram these LEDs for specific applications. This combination of targets is explained and shown in *Figure 36*. Some front-panel relabeling of LEDs may be needed if you reprogram them for unique or specific applications—see *Configurable Labels*.

Configurable Labels

Use the configurable labels to relabel the operator controls and LEDs (shown in *Figure 36*) to suit your installation requirements. This feature includes preprinted labels (with factory-default text), blank label media, and a Microsoft Word template. The Microsoft Word template is available at selinc.com. This allows you to create quick, professional-looking labels for the SEL-751. Labels may also be customized without the use of a PC by writing the new label on the blank stock provided with the configurable label kit. The ability to customize the control and indication features allows specific utility or industry procedures to be implemented without the need for adhesive labels.

Web Server

The web server allows you to communicate with the relay via the Ethernet port without the need for additional communication software (web browser required). The web server allows you to access metering and monitoring data and to perform firmware upgrades.

Firmware Download Via Ethernet Ports

Relay firmware can be securely downloaded to your relay via the Ethernet port. The firmware is digitally signed to prevent malicious modification. Additionally, the Ethernet firmware download allows you to access and update all your network relays simultaneously.

Relay Dimensions

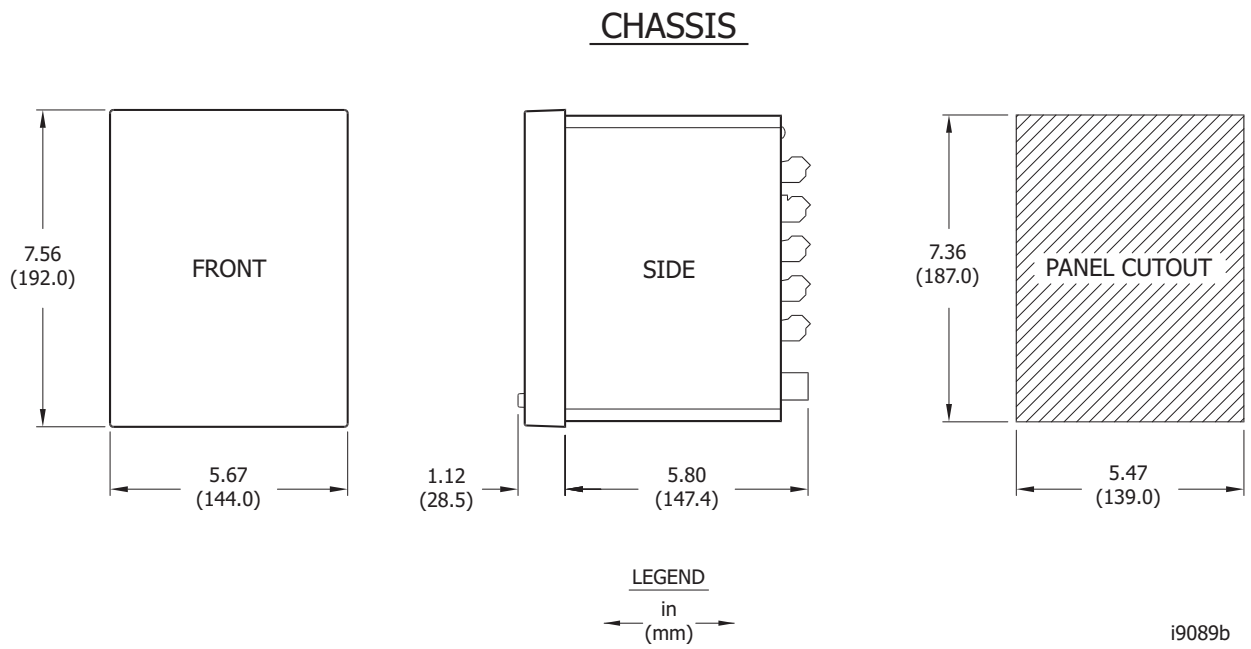

Figure 32 SEL-751 Dimensions for Rack- and Panel-Mount Models

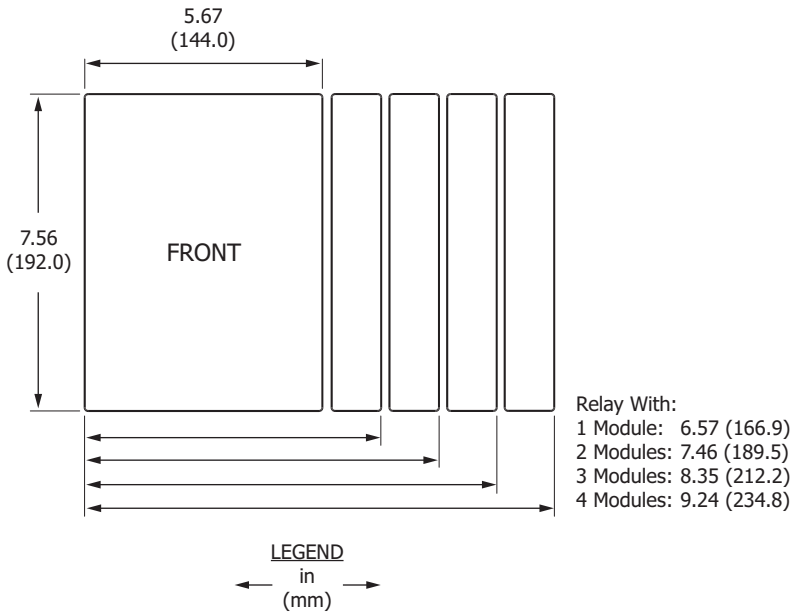

Figure 33 SEL-751 With I/O Module(s) Dimensions

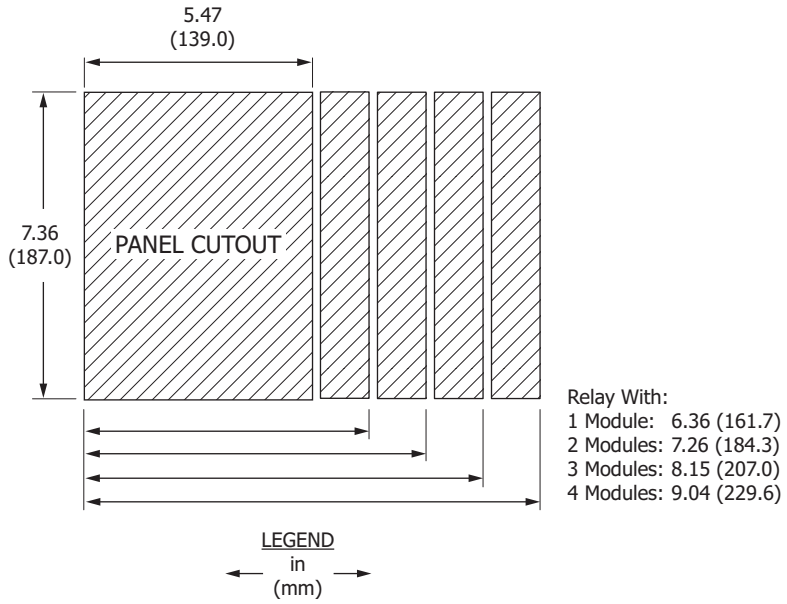

Figure 34 SEL-751 With I/O Module(s) Cutout Dimensions

Hardware Overview

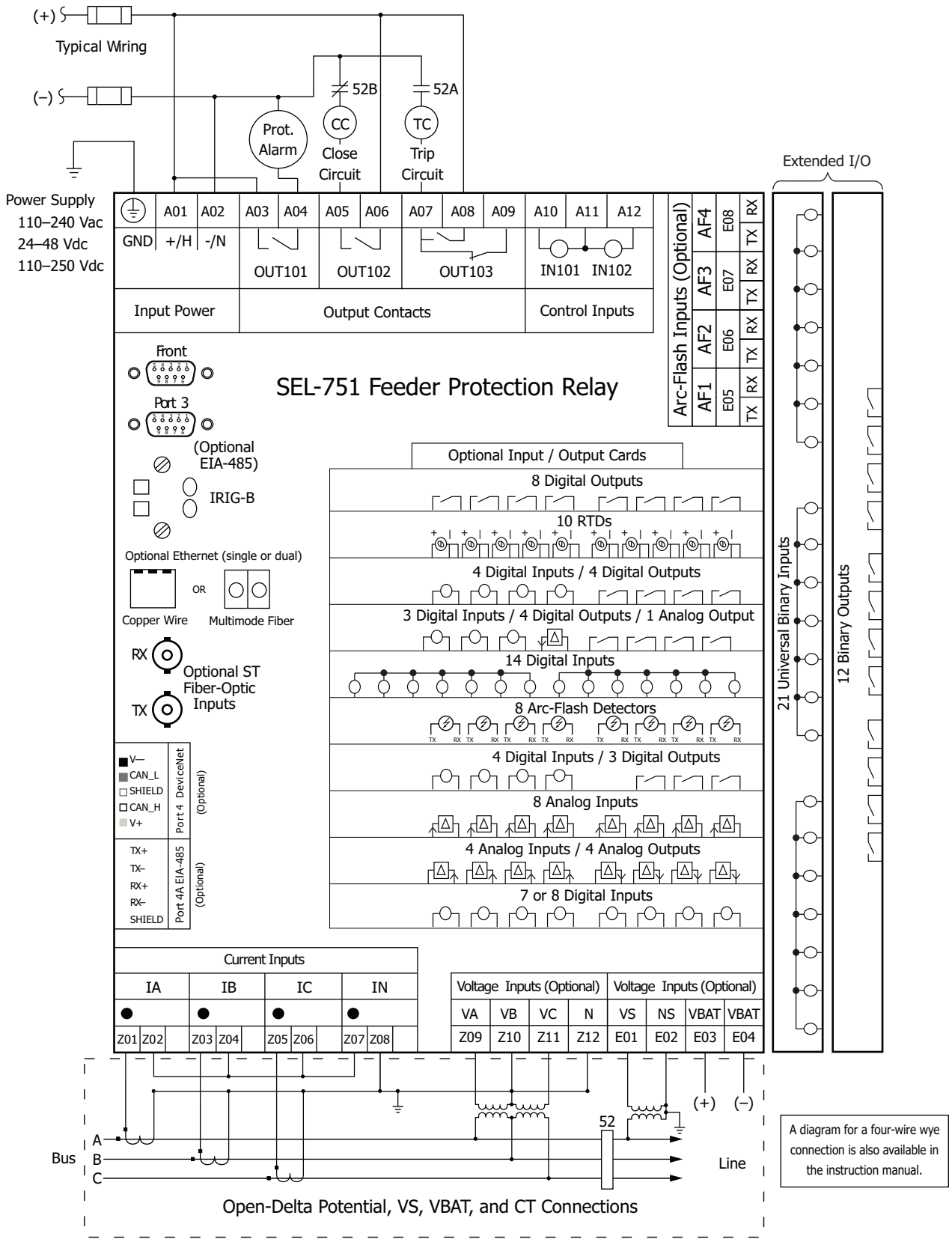

Figure 35 SEL-751 Hardware Overview

Relay Panel Diagrams

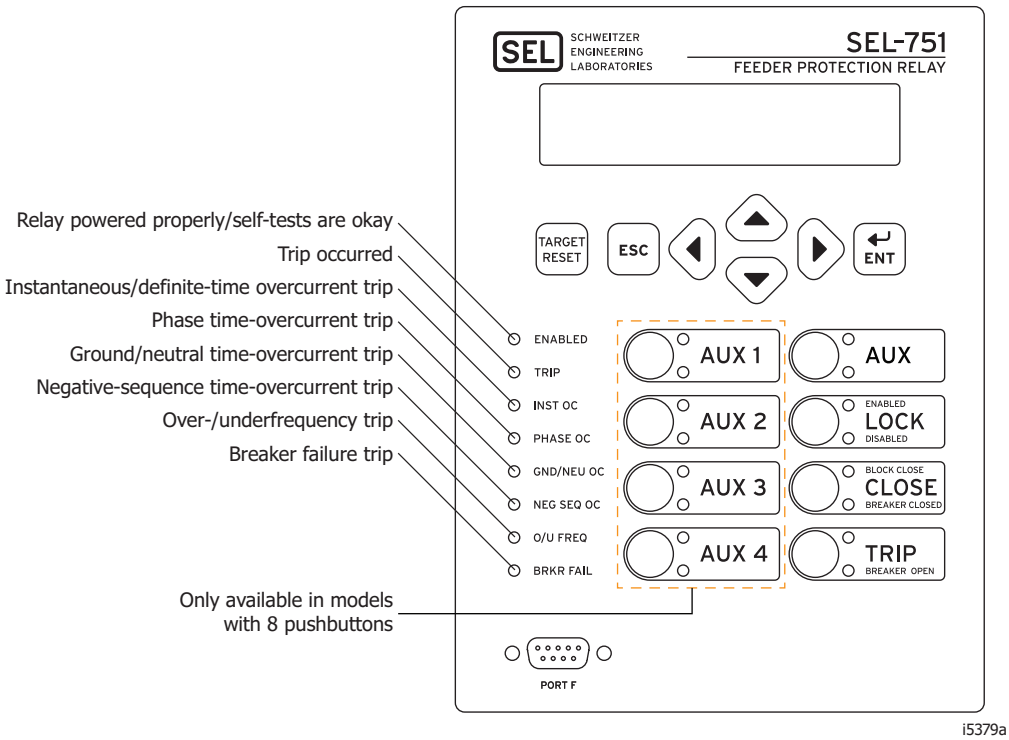

Figure 36 Front Panel With Default Configurable Labels

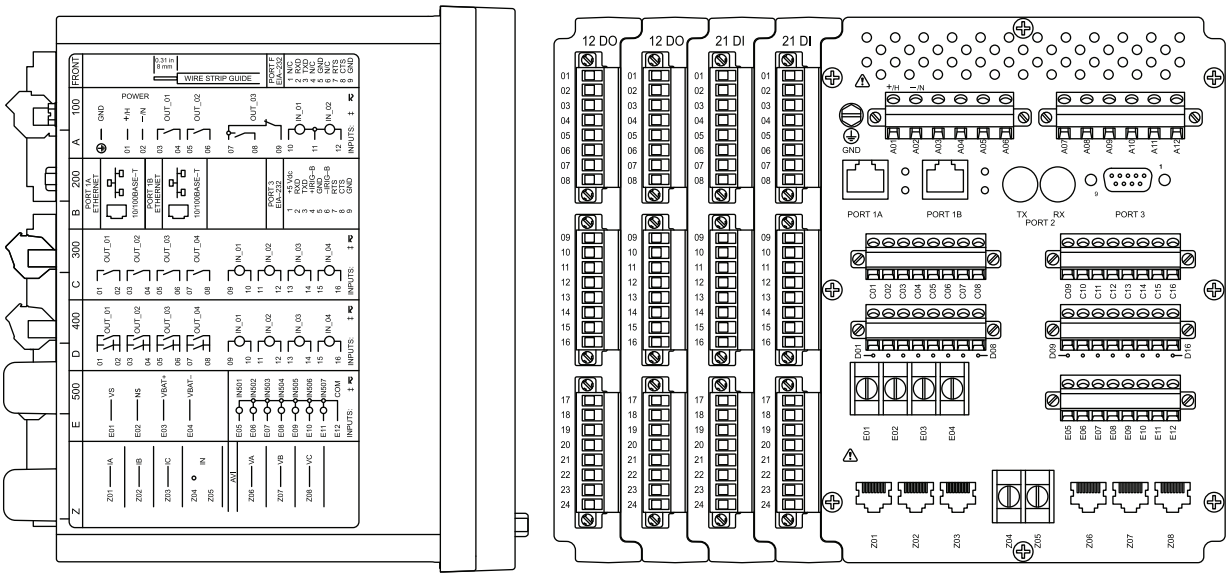

(A) Side-Panel Input and Output Designations

(B) Rear-Panel Layout

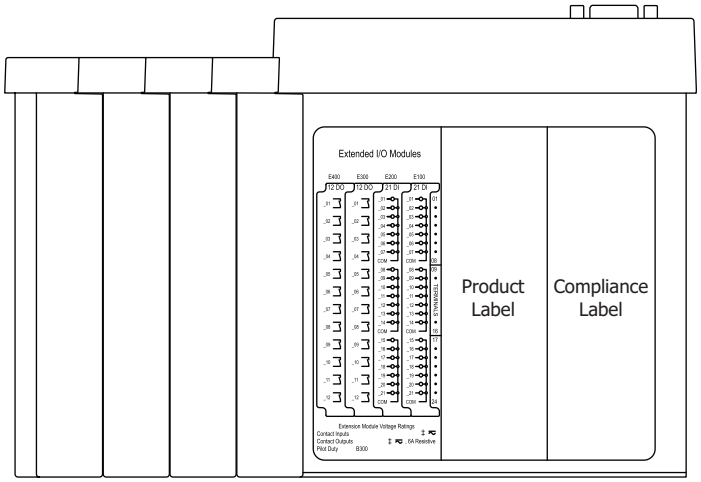

(C) Top-Panel Input and Output Designations

Figure 37 Dual 10/100 Base-T Ethernet, EIA-232 Rear Port, 4 DI/4 DO Card, Fast Hybrid 4 DI/4 DO Card, LEA Vsync/Vbat (300 Vdc) 7 DI Card, and 4 ACI/3 AVI LEA Card With 4 Extended I/O Modules (Two With 21 Inputs and Two With 12 Outputs) (Relay MOT 751091A1ACALA7LAF30)

Applications

Figure 38 shows some typical protection applications for the SEL-751. You can use the SEL-751 directional and nondirectional overcurrent functions to protect virtually any power system circuit or device including lines, feeders, transformers, capacitor banks, reactors, and generators. Over- and underfrequency, over- and undervoltage, vector shift, rate-of-change-of-frequency, and synchronism-check elements are well-suited for applications at distributed generation sites. Directional power elements make the relay suitable for utility and customer interface protection in applications with customer generation. IEC cable/line thermal elements can be used to prevent insulation damage.

Special relay versions can be ordered to provide sensitive earth fault (SEF) protection on high-impedance grounded systems and directional overcurrent ground fault protection on ungrounded, high-impedance grounded, and tuned reactance (Petersen coil) grounded systems.

The SEL-751 offers an extensive variety of protection and control features depending on the model and options selected. The SEL-751 can be configured to meet or exceed the protection and control requirements specified in the ANSI/IEEE Std 1547-2018, *IEEE Standard for*

Interconnection and Interoperability of Distributed Energy Resources with Associated Electric Power System Interfaces.

You can use powerful SELOGIC control equations in all SEL-751 models for custom protection and control applications. SEL application guides and technical support personnel are available to help with unique applications.

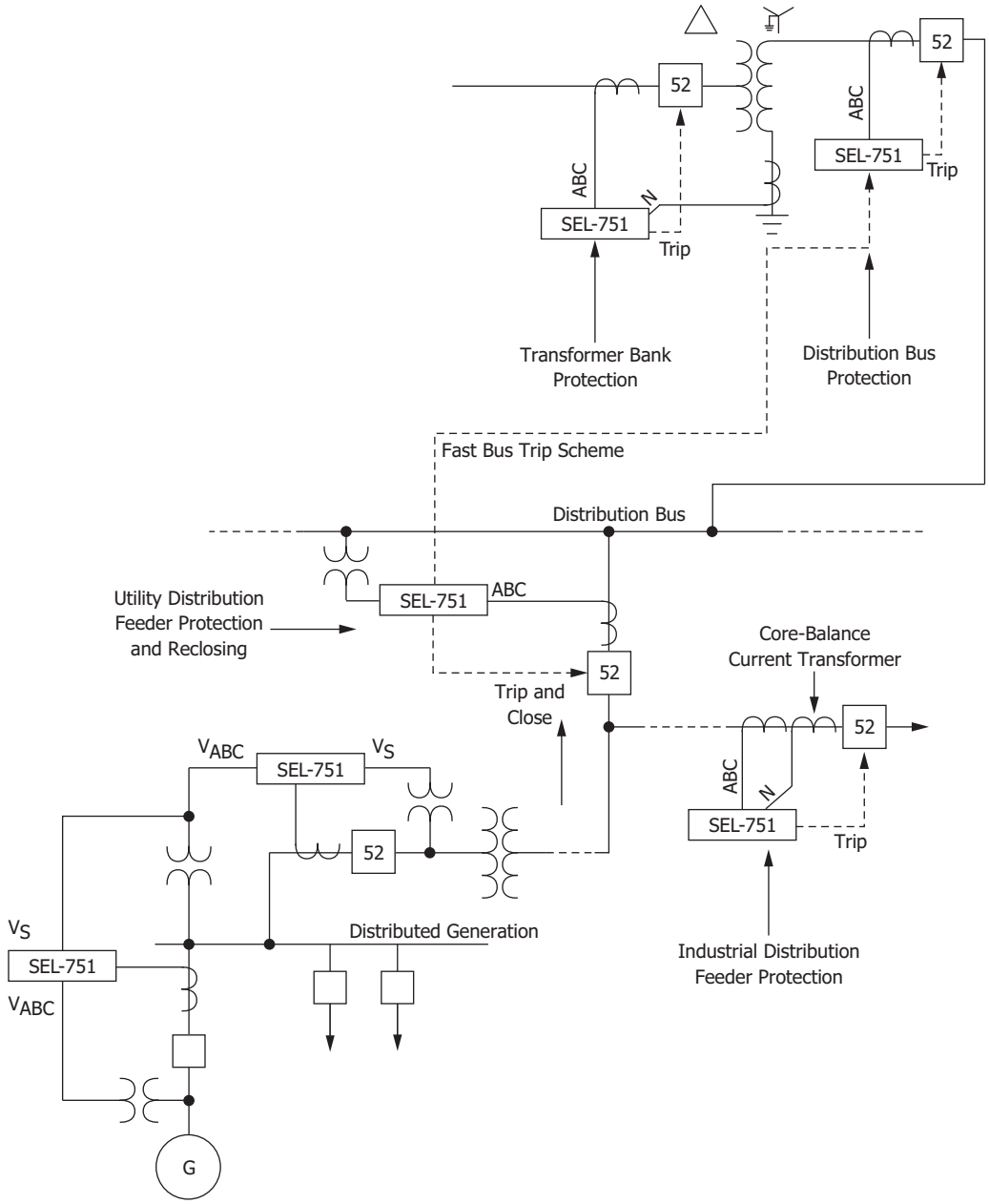

Figure 38 SEL-751 Feeder Protection Relay Applied Throughout the Power System

Specifications

Compliance

Designed and manufactured under an ISO 9001 certified quality management system

47 CFR 15B, Class A

Note: This equipment has been tested and found to comply with the limits for a Class A digital device, pursuant to part 15 of the FCC Rules. These limits are designed to provide reasonable protection against harmful interference when the equipment is operated in a commercial environment. This equipment generates, uses, and can radiate radio frequency energy and, if not installed and used in accordance with the instruction manual, may cause harmful interference to radio communications. Operation of this equipment in a residential area is likely to cause harmful interference in which case the user will be required to correct the interference at his own expense.

CE Mark

RCM Mark

UKCA Mark

Normal Locations

UL Listed to U.S. and Canadian safety standards (File E212775, NRGU, NRGU7)

Note: UL has not yet developed requirements for products intended to detect and mitigate an arc flash; consequently, UL has not evaluated the performance of this feature. While UL is developing these requirements, it will place no restriction on the use of this product for arc-flash detection and mitigation. For test results performed by an independent laboratory and other information on the performance and verification of this feature, please contact SEL customer service.

Hazardous Locations

UL Certified for Hazardous Locations to U.S. and Canadian standards CL 1, DIV 2; GP A, B, C, D; T3C, maximum surrounding air temperature of 40°C (File E470448)

EU

SEL 19 ATEX 0001X
II 3 G
Ex ec nC IIC T3 Gc

EN 60079-0:2012 + A11:2013, EN 60079-7:2015, EN 60079-15:2010, EN 60079-11:2012

Ambient air temperature shall not exceed –20°C ≤ Ta ≤ +40°C

Note: Where so marked, ATEX and UL Hazardous Location Certification tests are applicable to rated supply specifications only and do not apply to the absolute operating ranges, continuous thermal, or short circuit duration specifications.

General

AC Current Input

I_{NOM} = 200 mA, 1 A, or 5 A secondary, depending on the model.

Measurement Category: II

Phase and Neutral Currents

I_{NOM} = 5 A

Continuous Rating:	3 • I_{NOM} @ 85°C 4 • I_{NOM} @ 55°C
A/D Measurement Limit:	217 A peak (154 Arms symmetrical)
Saturation Current Rating:	Linear to 96 A symmetrical
1-Second Thermal:	500 A
Burden (per phase):	<0.1 VA @ 5 A

I_{NOM} = 1 A

Continuous Rating:	3 • I_{NOM} @ 85°C 4 • I_{NOM} @ 55°C
A/D Measurement Limit:	43 A peak (31 Arms symmetrical)
Saturation Current Rating:	Linear to 19.2 A symmetrical
1-Second Thermal:	100 A
Burden (per phase):	<0.01 VA @ 1 A

I_{NOM} = 200 mA

Continuous Rating:	4 A
A/D Measurement Limit:	8.4 A peak (6 Arms symmetrical)
Saturation Current Rating:	Linear to 4 A symmetrical
1-Second Thermal:	500 A
Burden (per phase):	<0.01 VA @ 0.2 A

Rogowski Coil-Based AC Current Inputs—Phase Currents

Continuous Rating:	30 Vrms
Nominal Input Voltage:	65 mV to 4.16 Vrms
Number of Gain Ranges:	6
Full Scale Voltage:	4, 8, 16, 32, 64, 128 Vrms
A/D Measurement Limit:	±185 V_{peak}
10-Second Thermal:	200 Vac
Input Impedance:	2 MΩ‖50 pF
Standard Compliance:	IEC 61869-6 IEC 61869-13

Low-Power Current Transformer (LPCT) Inputs—Phase Currents

Continuous Rating:	4 Vrms
Nominal Input Voltage:	16 mV to 260 mVrms
Number of Gain Ranges:	4
Full Scale Voltage:	1, 2, 4, 8 Vrms
A/D Measurement Limit:	±11.3 V_{peak}
10-Second Thermal:	200 Vac
Input Impedance:	2 MΩ‖50 pF
Standard Compliance:	IEC 61869-6 IEC 61869-13

AC Voltage Input

V_{NOM} (L-L) Setting Range:	20–250 V (if DELTA_Y := DELTA) 20–480 V (if DELTA_Y := WYE)

300 Vac Voltage Inputs

Rated Continuous Voltage:	300 Vac (phase-to-neutral)
10-Second Thermal:	600 Vac (phase-to-neutral)
A/D Measurement Limit:	315 Vrms

	Burden	Input Impedance (Per Phase)	Input Impedance (Phase-to-Phase)
Vphase	0.008 VA @ 120 Vac	2 MΩ	4 MΩ
Vbat/Vs	0.003 VA @ 120 Vac	5 MΩ	

Low-Energy Analog (LEA) Voltage Inputs (Euro Connector Input)

Rated Continuous Voltage:	8 Vac (phase-to-neutral)
Nominal LEA Voltage:	0.5–6.8 Vrms (phase-to-neutral)
Input Range:	±12 V_{peak}

10-Second Thermal:	300 Vac (phase-to-neutral)
Input Impedance:	2 MΩ single-ended (phase-to-neutral) 4 MΩ differential (phase-to-phase)

Low-Energy Analog Voltage Sensor Inputs (RJ45 Input)

Continuous Rating:	8 Vrms
Nominal Input Voltage:	0.5–6.8 Vrms
Full-Scale Voltage:	8 Vrms
A/D Measurement Limit:	±12 V_{peak} @ 60 Hz
10-Second Thermal:	200 Vac
Input Impedance:	2 MΩ‖50 pF
Standard Compliance:	IEC 61869-6 IEC 61869-13

Power Supply

Relay Start-Up Time:	Approximately 5–10 seconds (after power is applied until the **ENABLED** LED turns on)

High-Voltage Supply

Rated Supply Voltage:	110–240 Vac, 50/60 Hz 110–250 Vdc
Input Voltage Range (Design Range):	85–264 Vac 85–300 Vdc
Power Consumption:	<75 VA (ac) <30 W (dc)
Interruptions:	50 ms @ 125 Vac/Vdc 100 ms @ 250 Vac/Vdc

Low-Voltage Supply

Rated Supply Voltage:	24–48 Vdc
Input Voltage Range (Design Range):	19.2–60.0 Vdc
Power Consumption:	<30 W (dc)
Interruptions:	10 ms @ 24 Vdc (with no more than 67 outputs energized simultaneously) 50 ms @ 48 Vdc

Fuse Ratings

Low-Voltage Power Supply Fuse

Rating:	3.15 A
Maximum Rated Voltage:	300 Vdc, 250 Vac
Breaking Capacity:	1500 A at 250 Vac
Type:	Time-lag T

High-Voltage Power Supply Fuse

Rating:	3.15 A
Maximum Rated Voltage:	300 Vdc, 250 Vac
Breaking Capacity:	1500 A at 250 Vac
Type:	Time-lag T

Output Contacts

General

The relay supports Form A, B, and C outputs.

Dielectric Test Voltage:	2500 Vac
Impulse Withstand Voltage (U_{IMP}):	5000 V
Mechanical Durability:	100,000 no-load operations

Standard Contacts

Pickup/Dropout Time:	≤8 ms (coil energization to contact closure)

DC Output Ratings

Rated Operational Voltage:	250 Vdc
Rated Voltage Range:	19.2–275 Vdc
Rated Insulation Voltage:	300 Vdc
Make:	30 A @ 250 Vdc per IEEE C37.90
Continuous Carry:	Refer to graph in *Operating Temperature*
1-Second Thermal:	50 A
Contact Protection:	360 Vdc, 115 J MOV protection across open contacts

Breaking Capacity (10,000 Operations) per IEC 60255-0-20:1974:

24 Vdc	0.75 A	L/R = 40 ms
48 Vdc	0.50 A	L/R = 40 ms
125 Vdc	0.30 A	L/R = 40 ms
250 Vdc	0.20 A	L/R = 40 ms

Cyclic (2.5 Cycles/Second) per IEC 60255-0-20:1974:

24 Vdc	0.75 A	L/R = 40 ms
48 Vdc	0.50 A	L/R = 40 ms
125 Vdc	0.30 A	L/R = 40 ms
250 Vdc	0.20 A	L/R = 40 ms

AC Output Ratings

Maximum Operational Voltage (U_e) Rating:	240 Vac
Insulation Voltage (U_i) Rating (excluding EN 61010-1):	300 Vac
1-Second Thermal:	50 A
Contact Rating Designation:	B300

B300 (5 A Thermal Current, 300 Vac Max)			
	Maximum Current		Max VA
Voltage	120 Vac	240 Vac	—
Make	30 A	15 A	3600
Break	3 A	1.5 A	360
PF < 0.35, 50–60 Hz			

Utilization Category: AC-15

AC-15		
Operational Voltage (Ue)	120 Vac	240 Vac
Operational Current (Ie)	3 A	1.5 A
Make Current	30 A	15 A
Break Current	3 A	1.5 A
Electromagnetic loads > 72 VA, PF < 0.3, 50–60 Hz		

Voltage Protection Across Open Contacts:	270 Vac, 40 J

Fast Hybrid (High-Speed, High-Current Interrupting)

DC Output Ratings

Rated Operational Voltage:	250 Vdc
Rated Voltage Range:	19.2–275 Vdc
Rated Insulation Voltage:	300 Vdc
Make:	30 A @ 250 Vdc per IEEE C37.90
Carry:	Refer to graph in *Operating Temperature*
1-Second Thermal:	50 A
Open State Leakage Current:	<500 µA
MOV Protection (maximum voltage):	250 Vac/330 Vdc
Pickup Time:	<50 µs, resistive load

Dropout Time: <8 ms, resistive load

Breaking Capacity (10,000 Operations):

48 Vdc	10.0 A	L/R = 40 ms
125 Vdc	10.0 A	L/R = 40 ms
250 Vdc	10.0 A	L/R = 20 ms

Cyclic Capacity (4 Cycles in 1 Second, Followed by 2 Minutes Idle for Thermal Dissipation):

48 Vdc	10.0 A	L/R = 40 ms
125 Vdc	10.0 A	L/R = 40 ms
250 Vdc	10.0 A	L/R = 20 ms

AC Output Ratings

See *AC Output Ratings* for *Standard Contacts*.

Digital Inputs

Optoisolated Contact Inputs (SELECT I/O)

When Used With DC/AC Control Signals:

Pickup/Dropout Time (V_{DC}): Depends on the input debounce settings

Pickup/Dropout Time (V_{AC}): 2 ms pickup
16 ms dropout

Nominal Voltage AC/DC	Deassertion Range		Assertion Range	
	V_{DC} (V)	V_{AC} (V)	V_{DC} (V)	V_{AC} (V)
24 V	0.0–5.0	0.0–5.0	19.2–30.0	18.0–30.0
48 V	0.0–28.8	0.0–20.3	38.4–60.0	32.8–60.0
110 V	0.0–66.0	0.0–46.6	88.0–137.5	75.1–137.5
125 V	0.0–75.0	0.0–53.0	100.0–156.2	85.0–156.2
220 V	0.0–132.0	0.0–93.3	176.0–275.0	150.2–275.0
250 V	0.0–150.0	0.0–106.0	200.0–312.5	170.6–312.5

Current Draw at Nominal DC Voltage: 2 mA (at 220–250 V)
4 mA (at 48–125 V)
10 mA (at 24 V)

Rated Impulse Withstand Voltage (U_{imp}): 4000 V

Universal Binary Inputs (UBI) (Extended Module)

Rated Range: 24, 48, 110, 125, 220, and 250 Vdc/Vac, setting selectable

Maximum Current Draw: 2 mA (at 24/48 V)
1 mA (at 110/125 V)
0.5 mA (at 220/250 V)

Refer to the graph in *Operating Temperature* for the thermal derating curve.

Pickup Time: 2 ms plus ±1 ms (48–250 Vac/Vdc)
4 ms plus ±1 ms (24 Vac/Vdc)

Dropout Time: 10 ms plus ±1 ms (24–250 Vac)
2 ms plus ±1 ms (48–250 Vdc)
4 ms plus ±1 ms (24 Vdc)

Nominal Voltage AC/DC	Deassertion Range (±5%)		Assertion Range (±5%)	
	V_{DC} (V)	V_{AC} (V)	V_{DC} (V)	V_{AC} (V)
24 V	0.0–14.4	0.0–10.1	19.2–30.0	16.8–26.4
48 V	0.0–28.8	0.0–20.2	38.4–60.0	33.6–52.6
110 V	0.0–66.0	0.0–46.2	88.0–132.0	77.0–116.2
125 V	0.0–75.0	0.0–52.5	100.0–156.2	87.5–137.5
220 V	0.0–132.0	0.0–92.4	176.0–264.0	154.0–232.3
250 V	0.0–150.0	0.0–105.0	200.0–300.0	175.0–264.0

Analog Output (Optional)

	1 A0	4 A0
Current:	4–20 mA	±20 mA
Voltage:	—	±10 V
Load at 1 mA:	—	0–15 kΩ
Load at 20 mA:	0–300 Ω	0–750 Ω
Load at 10 V:	—	>2000 Ω
Refresh Rate:	100 ms	100 ms
% Error, Full Scale, at 25°C:	<±1%	<±0.55%
Select From:	Analog quantities available in the relay	

Analog Inputs (Optional)

Maximum Input Range: ±20 mA
±10 V
Operational range set by user

Input Impedance: 200 Ω (current mode)
>10 kΩ (voltage mode)

Accuracy at 25°C

With User Calibration: 0.05% of full scale (current mode)
0.025% of full scale (voltage mode)

Without User Calibration: Better than 0.5% of full scale at 25°C

Accuracy Variation With Temperature: ±0.015% per °C of full-scale (±20 mA or ±10 V)

Arc-Flash Detectors (Optional)

Multimode fiber-optic receiver/transmitter pair

Fiber Type: 1000 µm diameter, 640 nm wavelength, plastic, clear-jacketed, or black-jacketed

Connector Type: V-pin

Frequency and Phase Rotation

System Frequency: 50, 60 Hz

Phase Rotation: ABC, ACB

Frequency Tracking: 15–70 Hz

Time-Code Input

Format: Demodulated IRIG-B

On (1) State: $V_{ih} \geq 2.2$ V

Off (0) State: $V_{il} \leq 0.8$ V

Input Impedance: 2 kΩ

Synchronization Accuracy

Internal Clock: ±1 µs

Synchrophasor Reports (e.g., **MET PM**): ±10 µs

All other reports: ±5 ms

SNTP Accuracy: ±1 ms (in an ideal network)

PTP Accuracy: ±1 ms for firmware-based PTP
±250 ns for hardware-based PTP

Unsynchronized Clock Drift Relay Powered: 2 minutes per year typical

Communications Ports

Standard EIA-232 (2 ports)

Location: Front Panel
Rear Panel

Data Speed: 300–38400 bps

EIA-485 Port (optional)

Location:	Rear panel
Data Speed:	300–19200 bps

Ethernet Port (optional)

Single/Dual 10/100BASE-T copper (RJ45 connector)
Single/Dual 100BASE-FX (LC connector)

EIA-232 Multimode Fiber-Optic Port (Optional)

Location:	Rear panel
Data Speed:	300–38400 bps

Fiber-Optic Ports Characteristics

Port 1 (or 1A, 1B) Ethernet

Wavelength:	1300 nm
Optical Connector Type:	LC
Fiber Type:	Multimode
Link Budget:	16.1 dB
Typical TX Power:	–15.7 dBm
RX Min. Sensitivity:	–31.8 dBm
Fiber Size:	62.5/125 µm
Approximate Range:	~6.4 km
Data Rate:	100 Mbps
Typical Fiber Attenuation:	–2 dB/km

Port 2 Serial

Wavelength:	820 nm
Optical Connector Type:	ST
Fiber Type:	Multimode
Link Budget:	8 dB
Typical TX Power:	–16 dBm
RX Min. Sensitivity:	–24 dBm
Fiber Size:	62.5/125 µm
Approximate Range:	~1 km
Data Rate:	5 Mbps
Typical Fiber Attenuation:	–4 dB/km

Channels 1-8 Arc-Flash Detectors (AFDI)

Diagnostic Wavelength:	640 nm
Optical Connector Type:	V-pin
Fiber Type:	Multimode
Typical TX Power:	–12 dBm

Point Sensor

Minimum Receive Sensitivity:	–52.23 dB
Point Sensor Diagnostic Worst Case Loss:	–28 dB
Link Budget:	12.23 dB
Black-Jacketed Fiber Worst Case Loss:	–0.19 dBm
Black-Jacketed Fiber Typical Loss:	–0.17 dBm
ST or V-Pin Connector Splice Loss:	–2.00 dB
Approximate Range:	As much as 35 m

Fiber Sensor

Minimum Receive Sensitivity:	–29.23 dB
Link Budget:	17.23 dB
Clear-Jacketed Fiber Worst Case Loss:	–0.19 dBm
Clear-Jacketed Fiber Typical Loss:	–0.17 dBm
ST or V-Pin Connector Splice Loss:	–2.00 dB
Approximate Range:	As much as 70 m

Optional Communications Cards

Option 1:	EIA-232 or EIA-485 communications card
Option 2:	DeviceNet communications card

Communications Protocols

SEL, Modbus RTU and TCP/IP, DNP3 serial and LAN/WAN, FTP, Telnet, SNTP, PTP, IEC 61850 Edition 2.1, IEC 60870-5-103, EtherNet/IP, IEC 62439-3 PRP, IEC 62439-3 HSR, IEEE 802.1Q-2014 RSTP, MIRRORED BITS, EVMSG, IEEE C37.118-2005 (synchrophasors), and DeviceNet

Operating Temperature

IEC Performance Rating:	–40° to +85°C (–40° to +185°F) (per IEC/EN 60068-2-1 and IEC/EN 60068-2-2)

Note: Not applicable to UL applications.
Note: The front-panel display is impaired for temperatures below –20°C and above +70°C.

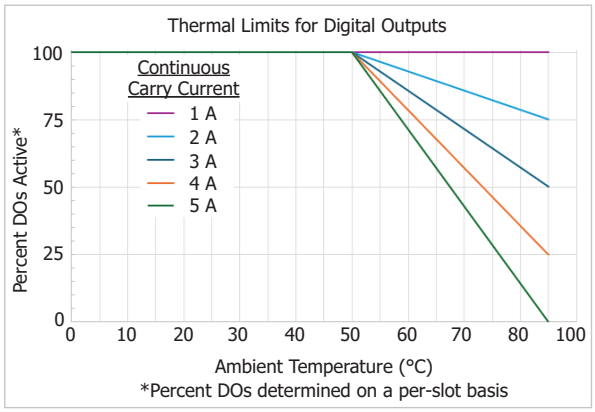

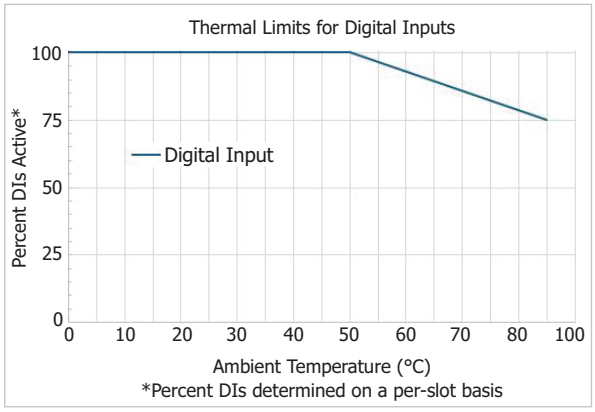

UL/CSA Thermal Derating

DeviceNet Communications Card Rating:	+60°C (+140°F) maximum

Operating Environment

Insulation Class:	1
Pollution Degree:	2
Overvoltage Category:	II
Atmospheric Pressure:	80–110 kPa
Relative Humidity:	5%–95%, noncondensing
Maximum Altitude Without Derating (Consult the Factory for Higher Altitude Derating):	2000 m

Dimensions

Base Model:	144.0 mm (5.67 in) x 192.0 mm (7.56 in) x 147.4 mm (5.80 in)
With 1 Extended I/O Module:	166.9 mm (6.57 in) x 192.0 mm (7.56 in) x 147.4 mm (5.80 in)
With 2 Extended I/O Modules:	189.5 mm (7.46 in) x 192.0 mm (7.56 in) x 147.4 mm (5.80 in)
With 3 Extended I/O Modules:	212.2 mm (8.35 in) x 192.0 mm (7.56 in) x 147.4 mm (5.80 in)
With 4 Extended I/O Modules:	234.8 mm (9.24 in) x 192.0 mm (7.56 in) x 147.4 mm (5.80 in)

Weight

2.7 kg (6.0 lb) + 0.34 kg (0.75 lb) per extended I/O module (max 4)

Relay Mounting Screw (#8-32) Tightening Torque

Minimum:	1.4 Nm (12 in-lb)
Maximum:	1.7 Nm (15 in-lb)

Terminal Connections

Terminal Block

Screw Size:	#6
Ring Terminal Width:	0.310-inch maximum

Terminal Block Tightening Torque

Minimum:	0.9 Nm (8 in-lb)
Maximum:	1.4 Nm (12 in-lb)

Compression Plug Tightening Torque

Minimum:	0.5 Nm (4.4 in-lb)
Maximum:	1.0 Nm (8.8 in-lb)

Compression Plug Mounting Ear Screw Tightening Torque

Minimum:	0.18 Nm (1.6 in-lb)
Maximum:	0.25 Nm (2.2 in-lb)

RTD Compression Plug Tightening Torque

Maximum:	0.25 Nm (2.2 in-lb)

Product Standards

Electromagnetic Compatibility:	IEC 60255-26:2013
Safety Standards:	IEC 60255-27:2013 UL 508 CSA C22.2 No. 14-05

Type Tests

Environmental Tests

Enclosure Protection:	IEC 60529:2001 + CRDG:2003 IP65 enclosed in panel IP50 for terminals enclosed in the dust-protection assembly (protection against solid foreign objects only) (SEL Part #915900170). The 10°C temperature derating applies to the temperature specifications of the relay. IP10 for terminals and the relay rear panel IP20 for terminals and the relay rear panel with optional terminal block cover

Note: If rear terminals are accessible during normal use, the product must be mounted in a locked enclosure or restricted area accessible by trained maintenance or operation personnel only.

Mixed Gas Corrosion:	IEC 60068-2-60, Method 3 ISA 71.04-2013, Class G3
Vibration Resistance:	IEC 60255-21-1:1988 IEC 60255-27:2013, Section 10.6.2.1 Endurance: Class 2 Response: Class 2
Shock Resistance:	IEC 60255-21-2:1988 IEC 60255-27:2013, Section 10.6.2.2 IEC 60255-27:2013, Section 10.6.2.3 Withstand: Class 1 Response: Class 2 Bump: Class 1
Seismic (Quake Response):	IEC 60255-21-3:1993 IEC 60255-27:2013, Section 10.6.2.4 Response: Class 2
Cold:	IEC 60068-2-1:2007 IEC 60255-27:2013, Section 10.6.1.2 IEC 60255-27:2013, Section 10.6.1.4 –40°C, 16 hours
Dry Heat:	IEC 60068-2-2:2007 IEC 60255-27:2013, Section 10.6.1.1 IEC 60255-27:2013, Section 10.6.1.3 85°C, 16 hours
Damp Heat, Steady State:	IEC 60068-2-78:2001 IEC 60255-27:2013, Section 10.6.1.5 40°C, 93% relative humidity, 10 days
Damp Heat, Cyclic:	IEC 60068-2-30:2001 IEC 60255-27:2013, Section 10.6.1.6 25° to 55°C, 95% relative humidity, 6 cycles
Change of Temperature:	IEC 60068-2-14:2009 IEC 60255-1:2010, Section 6.12.3.5 –40° to +85°C, ramp rate 1°C/min, 5 cycles

Dielectric Strength and Impulse Tests

Dielectric (Hi-Pot):	IEC 60255-27:2013, Section 10.6.4.3 IEEE C37.90-2005 1.0 kVac on analog outputs, Ethernet ports, Port 3, IRIG 2.0 kVac on analog inputs and extended I/O module contact inputs 2.5 kVac on SELECT I/O card contact inputs and all contact outputs 3.6 kVdc on power supply, current, and voltage inputs

Impulse:	IEC 60255-27:2013, Section 10.6.4.2 0.5 J, 5 kV on power supply, contact I/O, ac current, and voltage inputs 0.5 J, 1 kV on Port 3, RTD, and IRIG ports 0.5 J, 530 V on analog outputs IEEE C37.90:2005 0.5 J, 5 kV 0.5 J, 530 V on analog outputs

RFI and Interference Tests

Electrostatic Discharge Immunity:	IEC 61000-4-2:2008 IEC 60255-26:2013; Section 7.2.3 IEEE C37.90.3:2001 Severity Level 4 8 kV contact discharge 15 kV air discharge
Radiated RF Immunity:	IEC 61000-4-3:2010 IEC 60255-26:2013; Section 7.2.4 10 V/m IEEE C37.90.2-2004 20 V/m
Fast Transient, Burst Immunity[a]:	IEC 61000-4-4:2011 IEC 60255-26:2013; Section 7.2.5 4 kV @ 5.0 kHz 2 kV @ 5.0 kHz for comm. ports
Surge Immunity[a], [b]:	IEC 61000-4-5:2005 IEC 60255-26:2013; Section 7.2.7 2 kV line-to-line 4 kV line-to-earth
Surge Withstand Capability Immunity[a]:	EN 61000-4-18:2010 IEC 60255-26:2013; Section 7.2.6 2.5 kV common mode 1 kV differential mode 1 kV common mode on comm. ports IEEE C37.90.1-2002 2.5 kV oscillatory 4 kV fast transient Comm. ports, IRIG, and PTC ports Zone B, 2 kV line-to-earth LEA ports compliant with IEC 61869-13 tested to 1 kV, 1 MHz common mode
Conducted RF Immunity:	IEC 61000-4-6:2008 IEC 60255-26:2013; Section 7.2.8 10 Vrms
Magnetic Field Immunity:	IEC 61000-4-8:2009 IEC 60255-26:2013, Section 7.2.10 Severity Level: 1000 A/m for 3 seconds 100 A/m for 1 minute; 50/60 Hz IEC 61000-4-9: 2001 Severity Level: 1000 A/m IEC 61000-4-10:2001 Severity Level: 100 A/m (100 kHz and 1 MHz)
Power Frequency Immunity (DC Inputs):	IEC 61000-4-16:2015 Zone A: Differential: 150 Vrms Common Mode: 300 Vrms
Power Supply Immunity:	IEC 61000-4-11:2004 IEC 61000-4-17:1999 IEC 61000-4-29:2000 IEC 60255-26:2013, Section 7.2.11 IEC 60255-26:2013, Section 7.2.12 IEC 60255-26:2013, Section 7.2.13

EMC Emissions

Conducted Emissions:	IEC 60255-26:2013 Class A FCC 47 CFR Part 15.107 Class A Canada ICES-001 (A) / NMB-001 (A) EN 55011:2009 + A1:2010 Class A EN 55022:2010 + AC:2011 Class A EN 55032:2012 + AC:2013 Class A CISPR 11:2009 + A1:2010 Class A CISPR 22:2008 Class A CISPR 32:2015 Class A
Radiated Emissions:	IEC 60255-26:2013 Class A FCC 47 CFR Part 15.109 Class A Canada ICES-001 (A) / NMB-001 (A) EN 55011:2009 + A1:2010 Class A EN 55022:2010 + AC:2011 Class A EN 55032:2012 + AC:2013 Class A CISPR 11:2009 + A1:2010 Class A CISPR 22:2008 Class A CISPR 32:2015 Class A

Processing Specifications and Oscillography

AC Voltage and Current Inputs:	32 samples per power system cycle
Frequency Tracking Range:	15–70 Hz
Digital Filtering:	One-cycle cosine after low-pass analog filtering. Net filtering (analog plus digital) rejects dc and all harmonics greater than the fundamental.
Protection and Control Processing:	Processing interval is 4 times per power system cycle (except for math variables and analog quantities, which are processed every 25 ms). Analog quantities for rms data are derived from data averaged from the previous 8 cycles.
Arc-Flash Processing:	Arc-Flash light is sampled 32 times per cycle Arc-Flash current, light, and 2 fast hybrid outputs are processed 16 times per cycle
Phase Discontinuity Detection:	Processing rate is once every 2 power system cycles
Cold Load Pickup:	Processing rate is once every 2 power system cycles
Broken Conductor Detection:	Processing rate is once every 2 power system cycles

Oscillography

Length:	15, 64, 180, or 300 cycles
Sampling Rate:	32 samples per cycle unfiltered 4 samples per cycle filtered
Trigger:	Programmable with Boolean expression
Format:	ASCII and Compressed ASCII Binary COMTRADE (32 samples per cycle unfiltered)

Note: Binary COMTRADE format as per IEEE C37.111-2013, IEEE Standard Common Format for Transient Data Exchange (COMTRADE) for Power Systems.

Time-Stamp Resolution:	1 ms
Time-Stamp Accuracy:	±5 ms

Sequential Events Recorder

Time-Stamp Resolution:	1 ms
Time-Stamp Accuracy (With Respect to Time Source):	±1 ms

Functional Requirements

Over- and Undercurrent Protection:	IEC 60255-151:2009
Over- and Undervoltage Protection:	IEC 60255-127:2010
Frequency Protection:	IEC 60255-181:2019

Relay Elements

Instantaneous/Definite-Time Overcurrent (50P, 50G, 50N, 50Q)

Supported and Effective Setting Range, A Secondary:

5 A models:	0.25–100.00 A, 0.01 A steps
1 A models:	0.05–20.00 A, 0.01 A steps
200 mA models:	0.010–4.000 A, 0.001 A steps (50N)
Accuracy:	±3% of setting plus ±0.02 • I_{NOM} A secondary (steady state) ±5% of setting plus ±0.02 • I_{NOM} A secondary (transient) ±6% of setting plus ±0.02 • I_{NOM} A secondary (transient for 50Q)
Time Delay:	0.00–400.00 seconds, 0.01 seconds steps
Accuracy:	±0.5% plus ±0.25 cycle
Pickup/Dropout Time:	<1.75 cycles (with fast hybrid output contacts) 8 ms + <1.75 cycles (with standards contacts)
Reset Ratio:	95% for setting ≥0.1 • I_{NOM} 90% for setting <0.1 • I_{NOM}
Transient Overreach:	<15% for X/R = 10–120
Overshoot Time:	5 ms

Zero-Sequence PHI Directional

Pickup Setting Range, A Secondary:

5 A models:	0.25–100.00 A, 0.01-A steps
1 A models:	0.05–20.00 A, 0.01 A-steps
200 mA models:	0.005–4.000 A, 0.001-A steps
Pickup Accuracy:	±3% of setting plus ±0.02 • I_{NOM} A secondary (for 200 mA model, IN ≥ 0.01 A)

Pickup Setting Range, V Secondary:

	1–430 V, 1 V steps
Pickup Accuracy:	±1% of setting plus ±0.5 V
Angle Range:	0.0°–360.0°
Angle Accuracy:	±2° for currents greater than 30 mA secondary ±3° for currents 10 mA–30 mA secondary ±5° for currents greater than 5 mA secondary
Time Delay:	0.00–400.00 seconds, 0.01 second steps
Accuracy:	±0.5% plus ±0.25 cycle
Pickup/Dropout Time:	<1.75 cycles (with fast hybrid contacts) 8 ms + <1.75 cycles (with standard contacts)

Directional Intermittent Ground Fault

Pickup Setting Range, V Secondary:	1–430 V, 1 V steps
Activation Window:	1.00–3600.00 seconds, 0.01 second steps
Accuracy:	±0.5% plus ±0.25 cycle

Arc-Flash Instantaneous Overcurrent (50PAF, 50NAF)

Pickup Setting Range, A Secondary:

5 A models:	0.50–100.00 A, 0.01-A steps
1 A models:	0.10–20.00 A, 0.01 A-steps
Accuracy:	0 to +10% of setting plus ±0.02 • I_{NOM} A secondary (steady state pickup)
Pickup/Dropout Time:	2–5 ms/1 cycle

Arc-Flash Time-Overlight (TOL1–TOL8)

Pickup Setting Range, % of Full Scale:	3.0–80.0% (point sensor) 0.6–80.0% (fiber sensor)
Pickup/Dropout Time:	2–5 ms/1 cycle

Inverse-Time Overcurrent (51P, 51G, 51N, 51Q)

Supported Setting Range, A Secondary:

5 A models:	0.25–24.00 A, 0.01 A steps
1 A models:	0.05–4.8 A, 0.01 A steps
200 mA models:	10–960 mA, 0.01 mA steps (51N)

Effective Setting Range (IEC), A Secondary:

5 A models:	0.5–5.165 A, 0.01 A steps
1 A models:	0.1–1.03 A, 0.01 A steps
200 mA models:	10–206 mA, 0.01 mA steps (51N)
Lowest Value of Input Energizing Quantity for which the Relay is Guaranteed to Operate (G_T):	1.20 • setting
Threshold at which the Relay Switches from Dependent Time Operation to Independent Time Operation (G_D):	>30 • setting
Accuracy:	±5% of setting plus ±0.02 • I_{NOM} A secondary (steady state pickup)

Time Dial

U.S./IEEE:	0.50–15.00, 0.01 steps
IEC:	0.01–1.50, 0.01 steps
Accuracy (Operate Time):	±1.5 cycles, ±4% between 2 and 30 multiples of pickup (within A/D measurement limit)
Accuracy (Reset Time):	±1.5 cycles, ±4% between 0.5 and 0 multiples of pickup
Reset Ratio:	95% for setting ≥ 0.1 • I_{NOM} 90% for setting < 0.1 • I_{NOM}
Transient Overreach:	<15% for X/R = 10–120
Overshoot Time:	5–30 ms

Breaker Failure Instantaneous Overcurrent

Pickup Setting Range, A Secondary:

5 A models:	0.10–10.00 A, 0.01 A steps
1 A models:	0.02–2.00 A, 0.01 A steps

Accuracy:	±3% of setting plus ±0.02 • I_{NOM} A secondary (steady state)
Time Delay:	0.00–2.00 seconds, 0.01 second steps
Pickup/Dropout Time:	<1.5 cycles

IEC Thermal (49IEC)

Setting Range:	Trip pickup, 1%–150% Alarm pickup, 1%–100%
Pickup Accuracy:	±2% (for $I \geq I_{NOM}$) ±5% (for $0.4 \cdot I_{NOM} < I < I_{NOM}$)
Time to Trip/Reset Accuracy:	±5% plus ±0.5 s of the calculated value

Undervoltage (27P, 27PP, 27S)

Supported and Effective Setting Range:	OFF, 2.00–300.00 V, 0.01 V steps (phase elements, phase-to-phase elements with delta inputs or synchronism voltage input) OFF, 2.00–520.00 V, 0.01 V steps (phase-to-phase elements with wye inputs)
Accuracy:	±1% of setting plus ±0.5 V
Time Delay:	0.00–120.00 seconds, 0.01-second steps
Accuracy:	±0.5% plus ±0.25 cycle
Pickup/Dropout Time:	<1.75 cycles (with fast hybrid output contacts) 1.75 cycles + 8 ms (with standard contacts)
Reset Ratio:	106% for setting ≤ 10 V 101% for setting > 10 V
Overshoot:	35 ms

Overvoltage (59P, 59PP, 59G, 59Q, 59S)

Supported and Effective Setting Range:	OFF, 2.00–300.00 V, 0.01 V steps (phase elements, phase-to-phase elements with delta inputs or synchronism voltage input) OFF, 2.00–520.00 V, 0.01 V steps (phase-to-phase elements with wye inputs)
Accuracy:	±1% of setting plus ±0.5 V
Time Delay:	0.00–120.00 seconds, 0.01 second steps
Accuracy:	±0.5% plus ±0.25 cycle
Pickup/Dropout Time:	<1.75 cycles (with fast hybrid output contacts) 1.75 cycles + 8 ms (with standard contacts)
Reset Ratio:	96% for setting ≤ 10 V 99% for setting > 10 V
Overshoot:	35 ms

Overvoltage 3-Second RMS

Setting Range:	OFF, 2.00–300.00 V, 0.01 V steps (phase-to-phase elements with delta inputs) OFF, 2.00–520.00 V, 0.01 V steps (phase-to-phase elements with wye inputs)
Accuracy:	±2.5% of the setting value (during frequency tracking, FREQTRK := 1)

Incipient Cable Fault (50INC)

Pickup Setting Range, A Secondary:	OFF, 0.50–50.00 A (phase), 0.01-A steps for 5 A OFF, 0.10–10.00 A (phase), 0.01-A steps for 1 A
Accuracy:	±5% of setting A secondary
Pickup time:	<1/2 cycle

Inverse-Time Undervoltage (27I)

Supported and Effective Setting Range:	OFF, 2.00–300.00 V, 0.01 V steps (phase elements, positive-sequence elements, phase-to-phase elements with delta inputs or synchronism-check voltage input) OFF, 2.00–520.00 V, 0.01 V steps (phase-to-phase elements with wye inputs)
Accuracy:	±1% of setting plus ±0.5 V
Pickup/Dropout Time:	<1.75 cycles (with fast hybrid output contacts) 1.75 cycles + 8 ms (with standard contacts)
Time Dial:	0.00–16.00 s
Accuracy:	±1.5 cyc plus ±4% between 0.95 and 0.1 multiples of pickup
Reset Ratio:	103% for setting ≤ 10 V 102% for setting > 10 V
Overshoot Time:	5–30 ms

Inverse-Time Overvoltage (59I)

Supported and Effective Setting Range:	OFF, 2.00–300.00 V, 0.01 V steps (phase elements, sequence elements, or phase-to-phase elements with delta inputs or synchronism voltage input) OFF, 2.00–520.00 V, 0.01 V steps (phase-to-phase elements with wye inputs)
Accuracy:	±1% of setting plus ±0.5 V
Time Dial:	0.00–16.00 s, 0.01 s steps
Accuracy:	±1.5 cyc plus ±4% between 1.05 and 5.5 multiples of pickup
Pickup/Dropout Time:	<1.75 cycles (with fast hybrid output contacts) 1.75 cycles + 8 ms (with standard contacts)
Reset Ratio:	96% for setting ≤ 10 V 99% for setting > 10 V
Overshoot Time:	5–30 ms

Harmonic Blocking

Pickup Range (% of fundamental):	5%–100%
Pickup Accuracy (A secondary):	
5 A models:	±5% plus ±0.10 A of harmonic current
1 A models:	±5% plus ±0.02 A of harmonic current
Time Delay Accuracy:	±0.5% plus ±0.25 cycle

Vector Shift (78VS)

Pickup Setting Range:	2.0°–30.0°, 0.1-degree increment
Accuracy:	±10% of the pickup setting, ±1 degree
Voltage Supervision Threshold:	20.0%–100.0% • VNOM
Pickup Time:	<3 cycles

Power (32)

Instantaneous/Definite Time, Three-Phase Elements Type:	+W, –W, +VAR, –VAR
Pickup Setting Range, VA Secondary:	
5 A models:	1.0–6500.0 VA, 0.1 VA steps
1 A models:	0.2–1300.0 VA, 0.1 VA steps
Accuracy:	±0.10 A • (L-L voltage secondary) plus ±5% of setting at unity power factor for power elements and zero power factor for reactive power elements (5 A nominal) ±0.02 A • (L-L voltage secondary) plus ±5% of setting at unity power factor for power elements and zero power factor for reactive power elements (1 A nominal)
Time Delay:	0.0–240.0 seconds, 0.1-second steps
Pickup/Dropout Time:	<10 cycles

Power Factor (55)

Setting Range:	OFF, 0.05–0.99
Accuracy:	±5% of full scale for current ≥ 0.5 • I_{NOM}
Time Delay:	1–240 seconds, 1-second steps

Frequency (81)

Setting Range:	OFF, 15.00–70.00 Hz
Accuracy:	±0.01 Hz (V1 >60 V) with voltage tracking ±0.05 Hz (I1 >0.8 • I_{NOM}) with current tracking
Time Delay:	0.00–400.00 seconds, 0.01-second steps
Accuracy:	±0.5% plus ±0.25 cycle
Pickup/Dropout Time:	<5.5 cycles (with fast hybrid output contacts)
Reset Hysteresis:	<0.02 Hz

Rate-of-Change of Frequency (81R)

Setting Range:	OFF, 0.10–15.00 Hz/s
Accuracy:	±100 mHz/s, plus ±3.33% of pickup (over a range of 0.23–15.00 Hz/s)
Time Delay:	0.10–60.00 seconds, 0.01-second steps
Accuracy:	±0.5% plus ±0.25 cycle

Synchronism Check (25)

Pickup Range, Secondary Voltage:	0.00–300.00 V
Pickup Accuracy, Secondary Voltage:	±1% plus ±0.5 V (over the range of 2–300 V)
Slip Frequency Pickup Range:	0.05 Hz–0.50 Hz
Slip Frequency Pickup Accuracy:	±0.02 Hz
Phase Angle Range:	0°–80°
Phase Angle Accuracy:	±4°

Phase Reversal (47)

Setting Range:	OFF, ON
Fixed Time Delay:	500 ±6 ms

Load-Encroachment Detection

Pickup Setting Range	
5 A Model:	0.10–128.00 Ω secondary, 0.01 Ω steps
1 A Model:	0.50–640.00 Ω secondary, 0.01 Ω steps
Forward Load Angle:	–90° to +90°
Forward Load Angle:	+90° to +270°
Accuracy	
Impedance Measurement:	±5% plus ±0.5 Ω
Angle Measurement:	±3°

Phase Discontinuity Detection

Pickup Setting Range:	0.01–1.00 pu, 0.01 steps
Accuracy:	±5% of setting above 0.15 pu
Processing rate:	Once every 2 power system cycles

Broken Conductor Detection

Sensitivity (Minimum Line Charging Current Required for Broken Conductor Detection):	15 mA secondary for 5 A 3 mA secondary for 1 A
Minimum Operating Time (After the Conductor Breaks and Series Arc Extinguishes):	4 cycles
Maximum Operating Time (After the Conductor Breaks and Series Arc Extinguishes):	8 cycles
Time Delay for Zone 2:	OFF, 0–600 cycles, 1-cycle steps
Timer Accuracy:	±2 cycles
Processing Rate:	Once every 2 power system cycles

Phase Voltage THD (VTHD)

Pickup Setting Range:	OFF, 1.0%–50.0% (includes 2nd–5th harmonic)
Pickup Accuracy:	±3% of reading ±0.5
Arming Delay:	OFF, 0.00–120.00 s
Trip Delay:	OFF, 0.00–120.00 s
Timer Accuracy:	±0.5% plus ±0.25 cycles

Cold-Load Pickup

Pickup Setting Range:	0–500 minutes, 1-minute steps
Accuracy:	0.5% ±2 cycles
Processing rate:	Once every 2 power system cycles

Station Battery Voltage Monitor

Operating Range:	0–350 Vdc (300 Vdc for UL purposes)
Pickup Range:	20.00–300.00 Vdc
Pickup accuracy:	±2% of setting plus ±2 Vdc

Timers

Setting Range:	Various
Accuracy:	±0.5% of setting plus ±1/4 cycle

RTD Protection

Setting Range:	OFF, 1°–250°C
Accuracy:	±2°C
RTD Open-Circuit Detection:	>250°C
RTD Short-Circuit Detection:	<–50°C
RTD Types:	PT100, NI100, NI120, CU10
RTD Lead Resistance:	25 Ω max. per lead
Update Rate:	<3 s
Noise Immunity on RTD Inputs:	As high as 1.4 Vac (peak) at 50 Hz or greater frequency
RTD Fault/Alarm/Trip Time Delay:	Approx. 12 s

Metering

Accuracies are specified at 20°C, nominal frequency, ac currents within (0.2–20.0) • I_{NOM} A secondary, and ac voltages within 50–250 V secondary (1.33–6.67 V secondary with 8 V LEA option), unless otherwise noted.

Phase Currents:	±1% of reading, ±1° (±2.5° at 0.2–0.5 A for relays with I_{NOM} = 1 A)
Three-Phase Average Current:	±1% of reading
IG (Residual Current):	±2% of reading, ±2° (±5.0° at 0.2–0.5 A for relays with I_{NOM} = 1 A)
IN (Neutral Current):	±1% of reading, ±1° (±2.5° at 0.2–0.5 A for relays with I_{NOM} = 1 A) ±1.6 mA and ±1% (0.04–4.0 A) (0.2 A nominal channel IN current input)
I1 Positive-Sequence Current:	±2% of reading
3I2 Negative-Sequence Current:	±2% of reading
System Frequency:	±0.01 Hz of reading for frequencies within 15–70 Hz (V1 > 60 V)
Line-to-Line Voltages:	±1% of reading, ±1° for voltages
Three-Phase Average Line-to-Line Voltage:	±1% of reading for voltages within 24–264 V
Line-to-Ground Voltages:	±1% of reading, ±1° for voltages within 24–264 V (0.64–7.04 V for LEA inputs)
Three-Phase Average Line-to-Ground Voltages:	±1% of reading for voltages within 24–264 V (0.64–7.04 V for LEA inputs)
Accuracy Harmonic Range:	1%–100% (includes 2nd–5th harmonic) ±3% of reading ±0.5
Accuracy THD Range:	1%–100% (includes 2nd–5th harmonic) ±3% of reading ±0.5
Voltage Imbalance (%):	±2% of reading
V1 Positive-Sequence Voltage:	±2% of reading for voltages within 24–264 V (0.64–7.04 V for LEA inputs)
3V2 Negative-Sequence Voltage:	±2% of reading for voltages within 24–264 V (0.64–7.04 V for LEA inputs)
Real Three-Phase Power (kW):	±3% of reading for 0.10 < pf < 1.00
Reactive Three-Phase Power (kVAR):	±3% of reading for 0.00 < pf < 0.90
Apparent Three-Phase Power (kVA):	±3% of reading
Power Factor:	±2% of reading
RTD Temperatures:	±2°C

Energy Meter

Accumulators:	Separate IN and OUT accumulators updated once per second, transferred to nonvolatile storage 4 times per day
ASCII Report Resolution:	0.001 MWh
Accuracy:	The accuracy of the energy meter depends on applied current and power factor as shown in the power metering accuracy specifications above. The additional error introduced by accumulating power to yield energy is negligible when power changes slowly compared to the processing rate of once per second.

Synchrophasor Accuracy

Maximum Message Rate

Nominal 60 Hz System:	60 messages per second
Nominal 50 Hz System:	50 messages per second

The voltage accuracy specifications are only applicable for the model options with standard voltage inputs (not applicable to LEA option).
The current accuracy specifications are applicable for all 1 A and 5 A options.
Note: For the SEL-751 current only model, the accuracy specifications for currents are only applicable when the applied signal frequency equals FNOM.

Accuracy for Voltages

Level 1 compliant as specified in IEEE C37.118-2005 under the following conditions for the specified range.

Conditions

- At maximum message rate
- When phasor has the same frequency as the positive-sequence voltage
- Frequency-based phasor compensation is enabled PHCOMP := Y)
- The narrow bandwidth filter is selected (PMAPP := N)

Range

Frequency:	±5.0 Hz of nominal (50 or 60 Hz)
Magnitude:	30 V–250 V
Phase Angle:	–179.99° to 180.00°
Out-of-Band Interfering Frequency (Fs):	10 Hz ≤ Fs ≤ (2 • FNOM)

Accuracy for Currents

Level 1 compliant as specified in IEEE C37.118-2005 under the following conditions for the specified range.

Conditions

- At maximum message rate
- When phasor has the same frequency as the positive-sequence voltage
- Frequency-based phasor compensation is enabled (PHCOMP := Y)
- The narrow bandwidth filter is selected (PMAPP := N)

Range

Frequency:	±5.0 Hz of nominal (50 or 60 Hz)
Magnitude:	(0.4–2) • I_{NOM} (I_{NOM} = 1 A or 5 A)
Phase Angle:	–179.99° to 180.00°
Out-of-Band Interfering Frequency (Fs):	10 Hz ≤ Fs ≤ (2 • FNOM)

[a] Front-port serial cable (non-fiber) lengths assumed to be <3 m.
[b] RTD cable lengths assumed to be <10 m.

Technical Support

We appreciate your interest in SEL products and services. If you have questions or comments, please contact us at:

Schweitzer Engineering Laboratories, Inc.
2350 NE Hopkins Court
Pullman, WA 99163-5603 U.S.A.
Tel: +1.509.338.3838
Fax: +1.509.332.7990
Internet: selinc.com/support
Email: info@selinc.com

© 2011–2026 by Schweitzer Engineering Laboratories, Inc.

Content subject to change without notice.

Unless otherwise agreed in writing, all SEL product sales are subject to SEL's terms and conditions located here: https://selinc.com/company/termsandconditions/.

SCHWEITZER ENGINEERING LABORATORIES, INC.
2350 NE Hopkins Court • Pullman, WA 99163-5603 U.S.A.
Tel: +1.509.332.1890 • Fax: +1.509.332.7990
selinc.com • info@selinc.com

PDS751-01